Service Manual

CL4-SXR
CL6-SXR

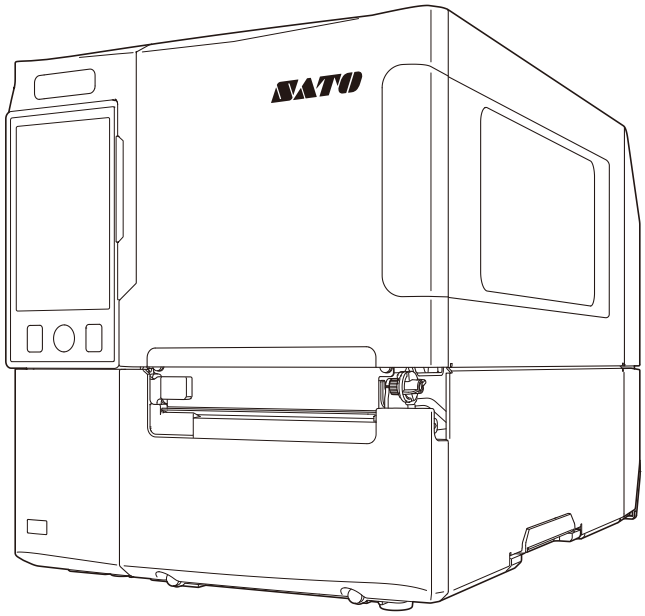

1 Introduction

2 Operation and Configuration

3 Checking and Performing Printer Adjustments

4 Replacement

5 Options

6 Troubleshooting

Copyrights

Any unauthorized reproduction of the contents of this document, in part or whole, is strictly prohibited.

Limitation of Liability

- SATO Corporation and its subsidiaries in Japan, the U.S. and other countries make no representations or warranties of any kind regarding this material, including, but not limited to, implied warranties of merchantability and fitness for a particular purpose. SATO Corporation shall not be held responsible for errors contained herein or any omissions from this material or for any damages, whether direct, indirect, incidental or consequential, in connection with the furnishing, distribution, performance or use of this material.
- Specifications and contents in this document are subject to change without notice.
- Be sure to perform a virus check on the USB memory before connecting it to the product. SATO Corporation shall not be held responsible for any product malfunctions caused by a virus spread via USB memory.
- Various types of data registered in the product and applications may be damaged. We recommend saving data separately in advance.

Trademarks

- SATO is a registered trademark of SATO Holdings Corporation and its subsidiaries in Japan, the U.S. and other countries.
- NiceLabel is a trademark or registered trademark of Euro Plus d.o.o. in the U.S.A and other countries.
- QR Code is a registered trademark of DENSO WAVE INCORPORATED.
- Wi-Fi® is a registered trademark of Wi-Fi Alliance.
- Wi-Fi Direct™, Wi-Fi Protected Setup™, WPA™ and WPA2™ are trademarks of Wi-Fi Alliance.
- Windows and Internet Explorer are either registered trademarks or trademarks of Microsoft Corporation in the United States and/or other countries.
- Bluetooth is a trademark of Bluetooth SIG, Inc., U.S.A.
- Android, YouTube, the YouTube logo, and Google Chrome are trademarks or registered trademarks of Google LLC.
- AirPlay, iPad, iPhone, iPod, iPod classic, iPod nano, iPod touch, Retina, and Safari are trademarks of Apple Inc., registered in the U.S. and other countries.
- iPad Air, iPad mini, and Lightning are trademarks of Apple Inc.
- The trademark “iPhone” is used with a license from Aiphone K.K.
- IOS is a trademark or registered trademark of Cisco in the U.S. and other countries and is used under license.
- All other trademarks are the property of their respective owners.

Version: CL4-SXR/CL6-SXR-r02-11-12-25SM

© 2025 SATO Corporation.
All rights reserved.

Table of Contents

Back to top

1 Introduction 5
1. 1 About This Manual 5
1. 2 Safety Precautions 5
1. 3 Parts Identification of the Printer 6
1.3.1 Front View 6
1.3.2 Internal View 6
1.3.3 Rear View 7

2 Operation and Configuration 8
2. 1 About [Settings] menu 10
2. 2 About [Tools] menu 11
2. 3 About [Clone] menu 12
2.3.1 Installing Clone Data 13
2.3.2 Backing up Settings Automatically 13
2. 4 About [HEX-Dump] menu 14
2.4.1 Hex Dump 14
2.4.2 Buffer Dump 14
2.4.3 Log Files 14
2. 5 About [Reset] menu 15
2. 6 About [Service] menu 16
2.6.1 Logging in Service Menu 16
2.6.2 Details of the Service Menu 17
2.6.3 RFID 18
2.6.4 WiFi Ex-Setting 19
2.6.5 Position Check 20
2.6.6 Factory Offset 21
2.6.7 Factory Pitch 22
2.6.8 Factory Label Top Adjust 23
2.6.9 Check Communication 24
2.6.10 Position Check 25
2. 7 Checking and Updating the Firmware 26
2.7.1 Checking the Firmware 26
2.7.2 Updating the Firmware 26

3 Checking and Performing Printer Adjustments 27

3. 1 Checking Before Starting Work.....29

3.1.1 Checking Printing with Actual User Data 29
3.1.2 Checking Installation Environment and Printer Conditions 29
3.1.3 Checking Printing with Factory Settings.....30

3. 2 Checking and Cleaning 32

3.2.1 Checking and Cleaning Optional Units.....34
3.2.2 Checking and Cleaning the Exterior 34
3.2.3 Blowing Air on the PCBs.....34

3. 3 Checks and Adjustments 35

3.3.1 Auto-calibration 35
3.3.2 Adjusting the Gap Sensor Manually 36
3.3.3 Adjusting the I-mark Sensor Manually.....38
3.3.4 Checking and adjusting the Label Top Sensor 40
3.3.5 Printing Quality 41
3.3.6 Meandering.....42
3.3.7 Checking and Adjusting the Print Position 42
3.3.8 Checking the Stop Position 42

3. 4 Final Check.....43

3.4.1 Checking Test Print with Factory Settings 43
3.4.2 Checking the Customer’s Layout.....43
3.4.3 Checking Barcode Scan.....43
3.4.4 Checking SOS Connection 43
3.4.5 Returning to the Original State.....43

4 Replacement 44
4. 1 Notes on Replacing Parts 46
4. 2 Cover 47
4.2.1 Replacing the OPEN COVER, COVER L 47
4.2.2 Replacing the FRONT COVER 48
4. 3 Printing Section 49
4.3.1 Replacing the Print Head (Thermal Head) 49
4. 4 Paper Transfer Section 52
4.4.1 Replacing the Platen Roller 52
4.4.2 Replacing the Torque Limiter for Ribbon Supply Spindle 54
4.4.3 Replacing the GEAR FRAME ASSY 57
4. 5 Sensor 61
4.5.1 Replacing the Gap Sensor 61
4.5.2 Replacing the Top Sensor 72
4.5.3 Replacing the Ribbon Sensor 73
4.5.4 Replacing the Label Near End Sensor 74
4.5.5 Replacing the Head Open Sensor 76
4. 6 PCBs and Electrical Parts 77
4.6.1 Replacing the CONT PCB 77
4.6.2 Replacing the ENGINE PCB 77
4.6.3 Replacing the CONTROL PANEL ASSY 81
4.6.4 Replacing the USB PCB 83
4.6.5 Replacing the Power Supply Unit 84
4.6.6 Replacing the Coin Battery (CR2032) 92

5 Installation of Options 93
5. 1 Removing the Front Covers (Standard) and Top Sensor 94
5. 2 Standard → Installing the CUTTER KIT 95
5. 3 Standard → Installing the ROTARY CUTTER (CL4-SXR Only) 97
5. 4 Standard → Installing the LINERLESS CUTTER KIT (CL4-SXR Only) 100
5. 5 Standard → Installing the DISPENSER KIT 104
5. 6 Installing the WIRELESS KIT 110
5. 7 Installing the RS232C/EXT KIT 115
5. 8 Installing the φ265mm HOLDER KIT.....116
5. 9 Installing the RFID KIT 121

6 Troubleshooting 135
6. 1 Error Message.....136
6.1.1 Error Code List.....136
6.1.2 Error causes and countermeasures.....139
6. 2 Symptom-based troubleshooting 157
6.2.1 Printing 157
6.2.2 Media feeding 161
6.2.3 Power Supply 168
6.2.4 Communications.....169

Reference 172

1 Introduction

1. 1 About This Manual

This service manual gives all the information necessary for you to adjust and repair the CL4-SXR/CL6-SXR.

This service manual is written only for SATO authorized service personnel. The information in this manual is confidential to general users.

For basic specification, installation, operation and configurations of the printer, refer to the operator manual of the CL4-SXR/CL6-SXR.

1. 2 Safety Precautions

For your safety and to protect valuable equipment, always read and follow all warnings, cautions and instructions carefully before you operate or repair the product.

Pictographic Symbols

The warning and caution symbols in this manual alert you of the information that you should follow. The symbol explanations are as follows.

Warning	The Warning symbol indicates that you can cause death or serious injury if you do not follow the instruction or procedure.
Caution	The Caution symbol indicates that you can cause injury or property damage if you do not follow the instruction or procedure.

⚠ WARNING

Always power off the product and disconnect the AC power cord from the outlet before you start any maintenance procedures. Perform maintenance procedures with the product power on could cause injury to people or damage to equipment. Power on the product only when you are instructed to do so.

Wear a properly grounded static wrist strap when you perform maintenance procedures.

Wear proper gloves when you perform maintenance procedures.

Do not touch the printing element with your bare hand when you replace the print head.

Hold the circuit board on the sides. Do not touch the components or bend the circuit board when you remove or install the circuit board.

Do not touch the cutter with your hands, nor place objects into the cutter. Doing so could cause an injury.

The print head will become hot after printing. Be careful not to touch it when replacing media or cleaning immediately after printing, to avoid being burned.

⚠ CAUTION

RISK OF EXPLOSION IF BATTERY IS REPLACED BY AN INCORRECT TYPE.

DISPOSE OF USED BATTERIES ACCORDING TO THE INSTRUCTIONS.

Back to top

1. 3 Parts Identification of the Printer

1.3.1 Front View

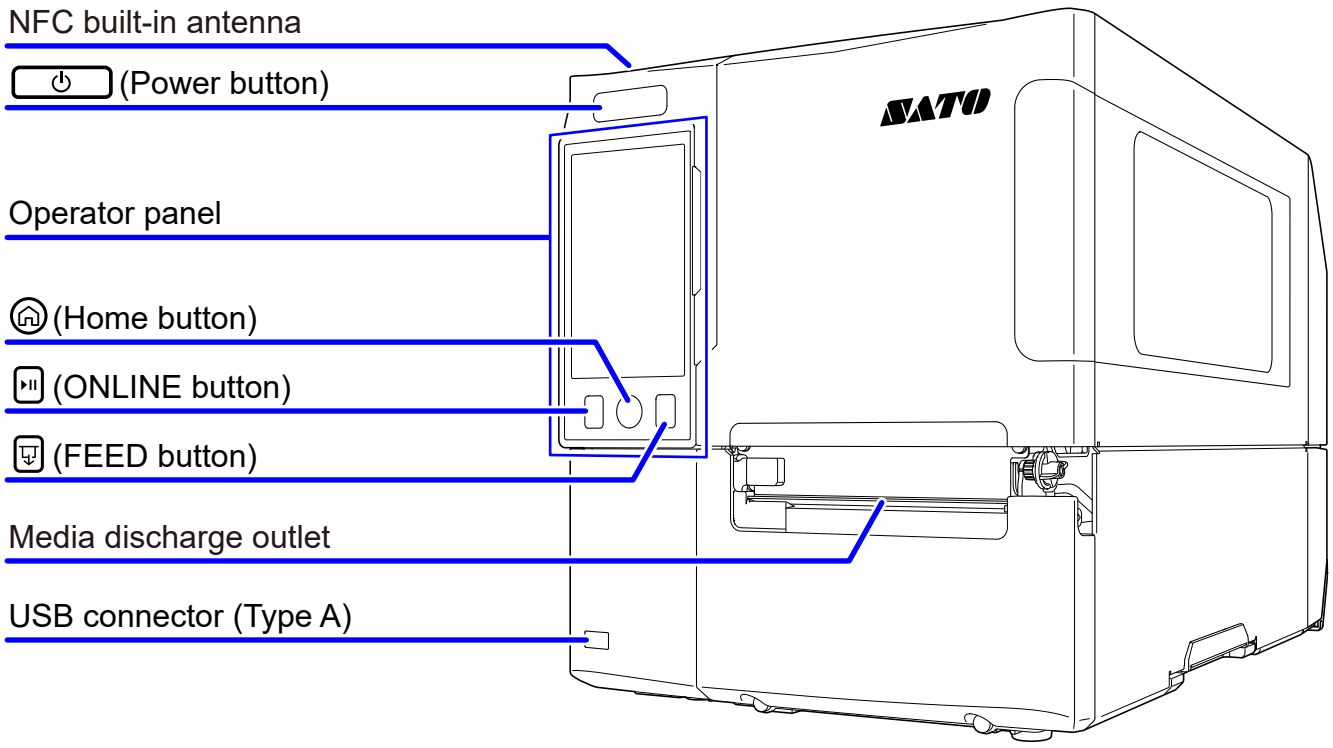

1.3.2 Internal View

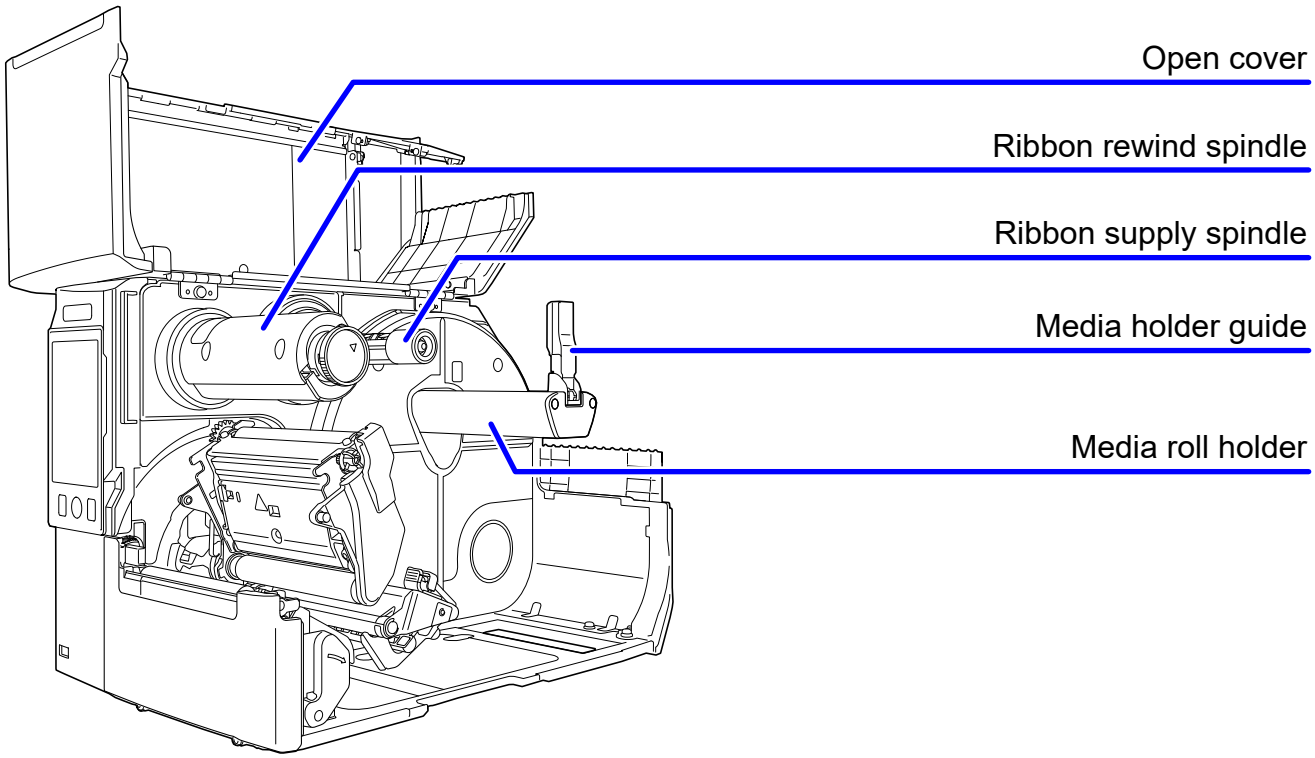

1.3.3 Rear View

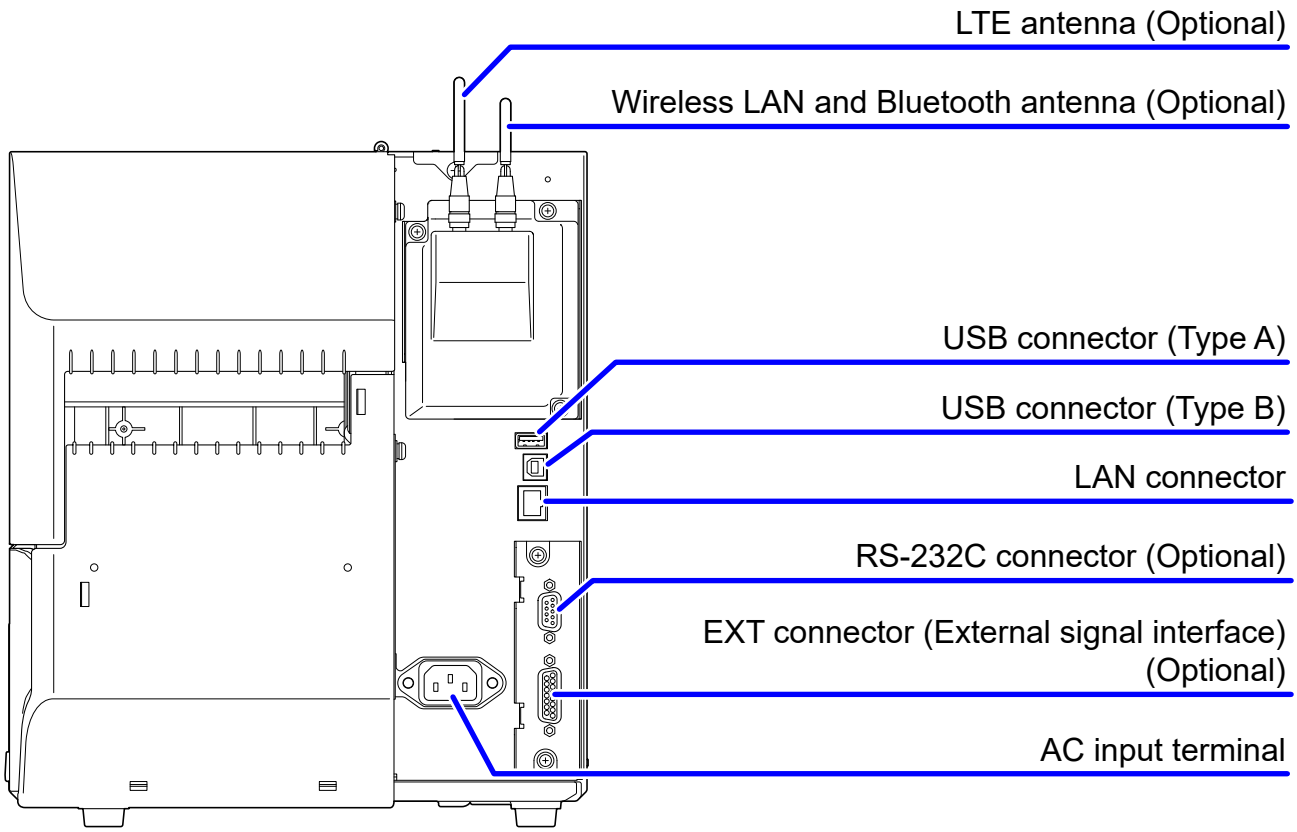

2 Operation and Configuration

Back to top

This chapter describes the following:

2. 1 About [Settings] menu

2. 2 About [Tools] menu

2. 3 About [Clone] menu

2.3.1 Installing Clone Data

2.3.2 Backing up Settings Automatically

2. 4 About [HEX-Dump] menu

2.4.1 Hex Dump

2.4.2 Buffer Dump

2.4.3 Log Files

2. 5 About [Reset] menu

2. 6 About [Service] menu

2.6.1 Logging in Service Menu

2.6.2 Details of the Service Menu

2.6.3 RFID

2.6.4 WiFi Ex-Setting

2.6.5 Position Check

2.6.6 Factory Offset

2.6.7 Factory Pitch

2.6.8 Factory Label Top Adjust

2.6.9 Check Communication

2.6.10 Position Check

2. 7 Checking and Updating the Firmware

2.7.1 Checking the Firmware

2.7.2 Updating the Firmware

2. 1 About [Settings] menu

There are the following main menus in the Settings mode and each main menu has some submenus.

Menu	Description
[Favorite]	Frequently used settings that are registered as favorites in the settings menu can be easily accessed from the [Favorites] menu.
[Printing]	Access the settings related to printing.
[Interface]	Access the settings related to the interfaces.
[Print Command]	Access the settings related to the print commands.
[Applications]	Access the settings related to the printer command.
[Cloud Services]	Access the settings related to the cloud services.
[System]	Access the settings related to the display language, buzzer volume, compatible mode, etc.
[Tools]	Access the settings related to the media profiles editing, test print, initialization, etc.
[Information]	Display the printer information and help videos.
[Language]	Access the settings related to the display language. This main menu appears when the following menu is enabled: [System] > [Regional] > [Messages]

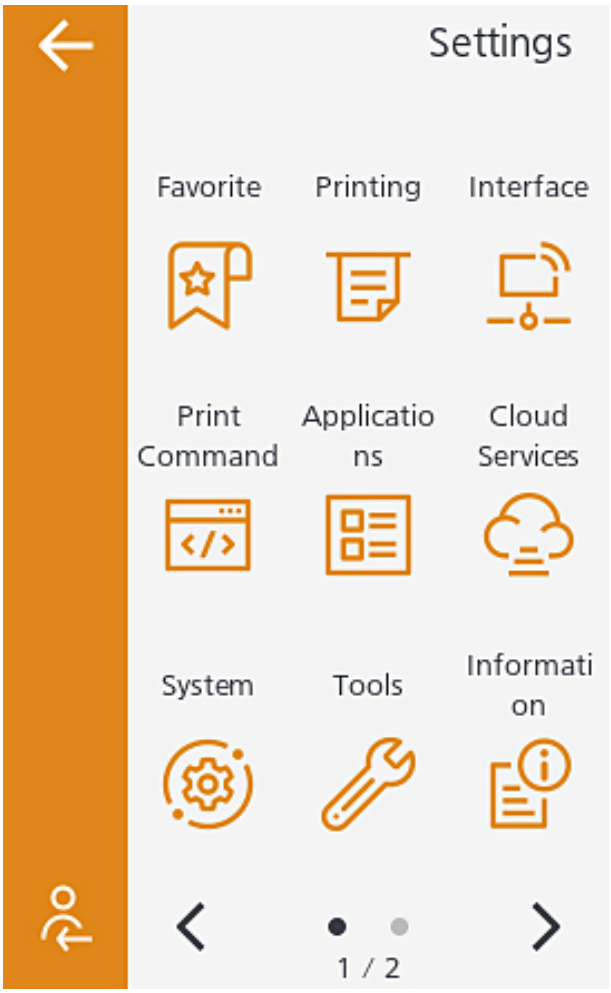

2. 2 About [Tools] menu

The table below shows the [Tools] menu.
Click on the items in blue to link directly to the details of the selected items.

Tools	Description
Test Print	
Factory	Perform the factory test print.
Configure List	Print the configuration information of the printer.
Paper Sensor	Print the detection result of the media sensor level.
BD address	Print the BD address.
Head Check	Print the head check results.
Clone	Use to transfer the settings to a new printer or to set up multiple printers with the same settings. Refer to 2. 3 About [Clone] menu
Logging Function	Save log data when the power is turned off.
HEX Dump	Save the receive buffer data to the printer. Refer to 2. 4 About [HEX-Dump] menu
Reset	Initialize the data saved in the printer. Refer to 2. 5 About [Reset] menu
Format USB drive	Format the USB memory.
Startup Guide	Supports initial setup (setting the date, setting the time, setting the media and ribbon, etc.).
Service	When you log in, "Service" is displayed. Refer to 2. 6 About [Service] menu

2. 3 About [Clone] menu

Copy the settings and installed data to the printer's memory.

Use this menu to transfer the settings to a new printer when replacing the printer, or to set up multiple printers with the same settings.

1 Select [Tools] > [Clone].

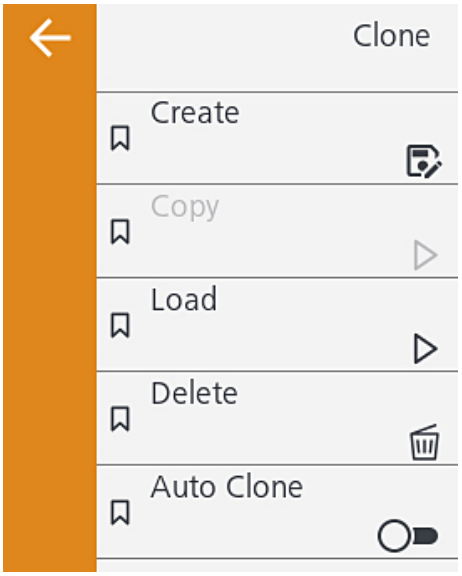

Create	Write the selected items to the printer's memory. ✓ Printing ✓ Interface ✓ With IP ✓ With BD Name ✓ Print Command ✓ Applications ✓ Cloud Services ✓ System ✓ Tools ✓ Contents
Load	Change the settings to the clone data in the printer's memory.
Delete	Delete the clone data in the printer's memory.

Copy	When you insert a USB memory, enable the copy function to copy the clone data in the printer's memory to the USB memory. **CAUTION** Be sure to perform a virus check for the USB memory before connecting the USB memory to the printer.

2.3.1 Installing Clone Data

1 Insert the USB memory on which the clone data is written into the printer and select the clone data to be installed.

2 If the selection is correct, select [✔].

3 The update starts and the printer automatically restarts.

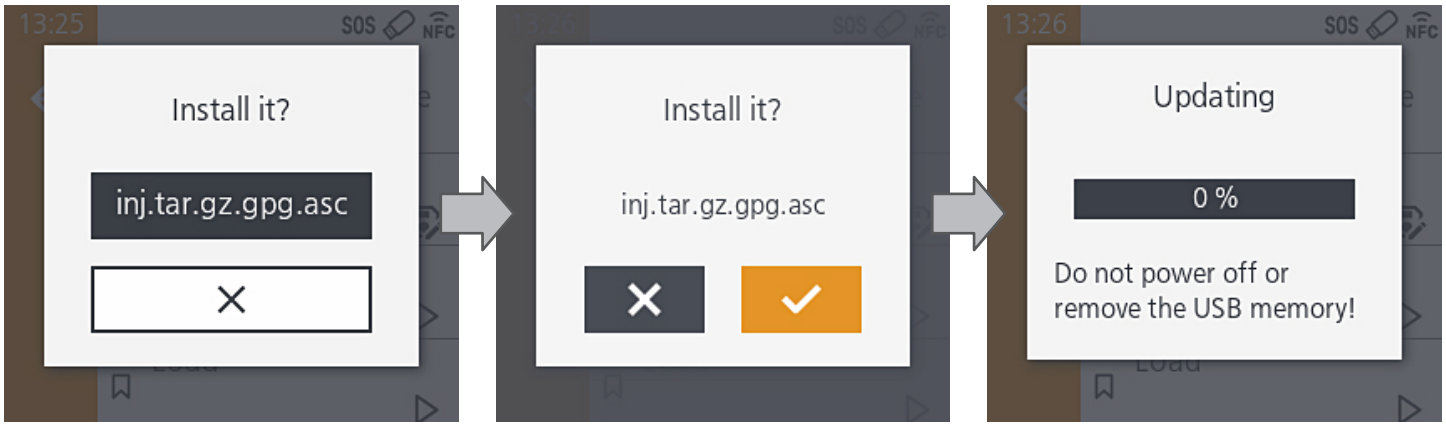

2.3.2 Backing up Settings Automatically

Automatically write the printer settings to the printer's memory.

1 Enable [Auto Clone].

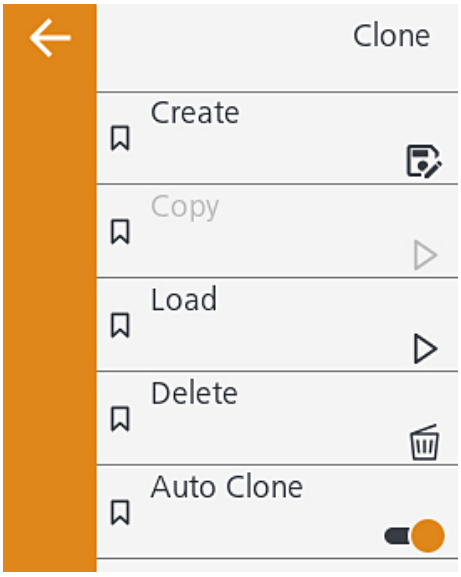

Note

- Backup is performed immediately after the power is turned on.

2. 4 About [HEX-Dump] menu

Print a hex dump and also save the dump data in the receive buffer to the printer's memory.

1 Select [Tools] > [Clone].

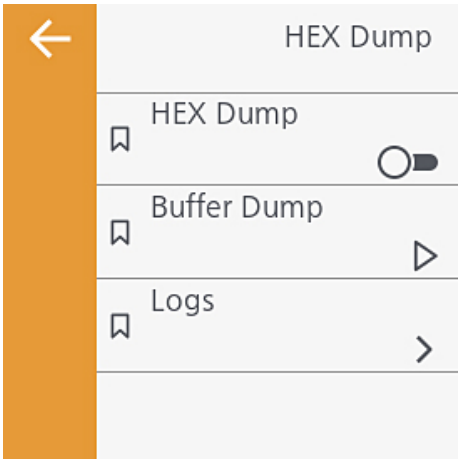

2.4.1 Hex Dump

If you enable [Hex Dump Mode], the product prints the received data and at the same time creates a file of the received data inside "hexdump/".

If you return the setting to disabled, you can check the file on the screen.

2.4.2 Buffer Dump

Save the receive buffer data to the product.

Available only if you disabled the [Hex Dump Mode] menu.

Tap [START] on the startup screen to save the data to the product.

Save the receive buffer data to "buff/" in the product.

2.4.3 Log Files

Manage the [HEX Dump] and [Buffer Dump] data.

Copy	buff/	Copy the selected log file to the USB memory. **Note** The data obtained by the buffer dump operation is stored.
	hexdump/	Copy the selected log file to the USB memory. **Note** The data obtained by the hex dump (enabled) operation is stored.
Remove	buff/	Delete the log files of the printer.
	hexdump/	
Print	buff/	Print the selected log files.
	hexdump/	

2. 5 About [Reset] menu

Reset the printer settings and counter information.

1 Select [Tools] > [Reset].

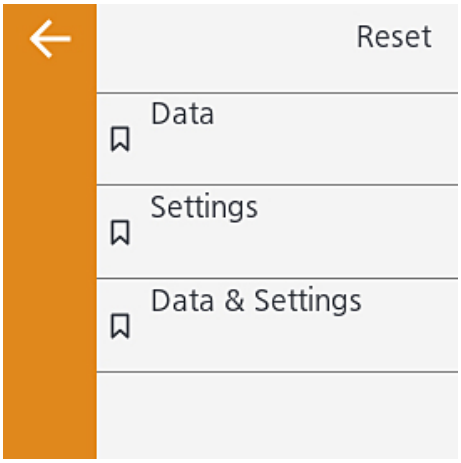

Item		Description
Data		Initialize the setting values set in [Printing], [Interface], [Application] and [System]. **Note** After initialization, the printer restarts automatically.
Settings		
	User Reset	Initialize the setting values set in [Printing], [Interface], [Application] and [System].
	User Reset (–Interface)	Initialize the same setting values as the “User Reset” except the settings in the [Interface] menu.
	Factory Reset	Initialize to the status of factory shipment.
	Factory Reset (–Interface)	Initialize to the status after factory shipment except for [Interface].
	Interface	Initialize the setting values set in [Interface] main menu.
	Printing	Initialize the setting values set in [Printing] main menu.
Data & Settings		Initialize the above data and the items selected from the following “Settings”. **Note** After initialization, the printer restarts automatically.

2. 6 About [Service] menu

There are three types of passwords (manager, service, and factory), and each model has a unique password for each type.

There are two ways to search for your password when logging in to service mode:

- Search via WEB (Traceability Information)
- Search via the smartphone app (AIOT)

2.6.1 Logging in Service Menu

When you select the icon in the red frame in the Settings menu, the product shows the Login screen. When you log in with your service password, Service shows under Startup Guide.

CAUTION

Do not use your manager (customer) password when logging in to service mode.
If once entered, the Login screen will no longer appear for subsequent logins.

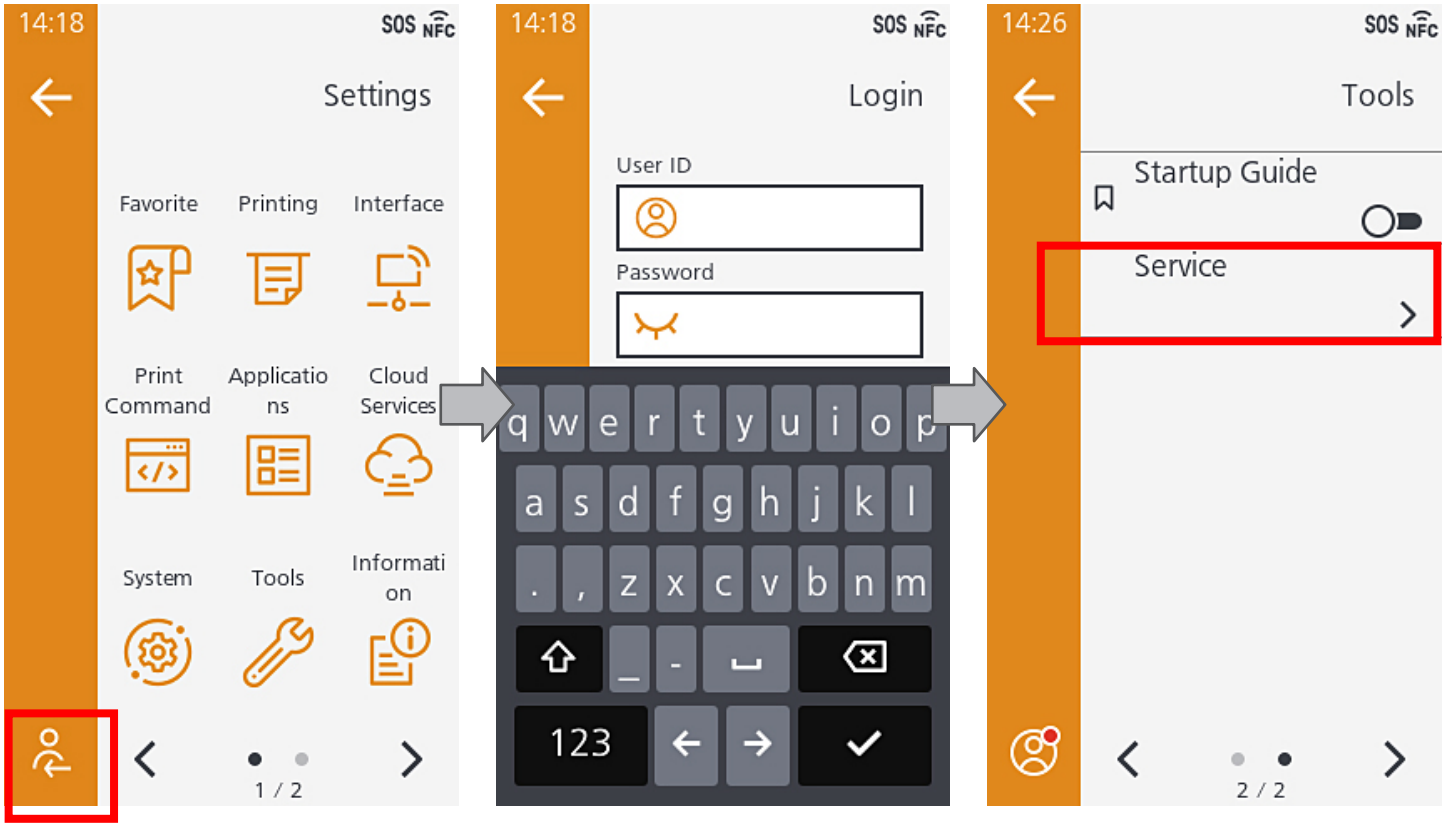

2.6.2 Details of the Service Menu

Item	Description
RFID	Set the functions for RFID. * Shows only if you have installed the optional RFID kit. Refer to 2.6.3 RFID
WiFi Ex-Setting	Set the advanced functions for the wireless LAN. * Shows only if you have installed the optional wireless LAN. Refer to 2.6.4 WiFi Ex-Setting
Hide Help Videos	Set whether to show or hide the help videos in [Settings] > [Information] > [Help]. Check “Hide Help Video” to hide the help videos.
Maintenance	Manually set the serial number of the printer or the USB.
Position Check	Check the offset position of the label and an error is displayed if it exceeds the allowable range set in “± Check Values”. Refer to 2.6.4 Position Check
Factory Offset	Correct the offset position. Refer to 2.6.5 Factory Offset
Factory Pitch	Offset the print position in the vertical direction. Refer to 2.6.6 Factory Pitch
Factory Label Top Adjust	Correct the label top position. Refer to 2.6.7 Factory Label Top Adjust
Job Control	Enable or disable the function to preview, print, and delete the printer job data. * For development research purposes. Not normally used.
Check Communication	Check the communication status of the interface connected to the printer. Refer to 2.6.8 Check Communication
Over Power Mode	Not normally used.
Position Check	Perform the operation check of the touch panel. Refer to 2.6.9 Position Check

2.6.3 RFID

1 Select [Service] > [RFID].

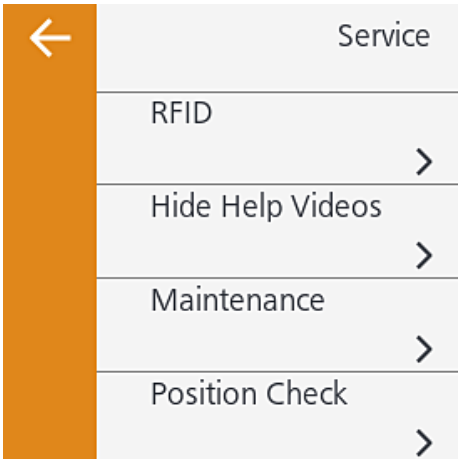

Menu	Description
Module	Shows the type of RFID module installed on the printer.
Region	Set the region where you use the printer. * Shows only if you have installed the UHF RFID module.
Inventory Check	Enable or disable the inventory check function. * Shows only if you have installed the UHF RFID module.
Inventory Timeout	Set the timeout period of the inventory check. * Shows only if you have installed the UHF RFID module.
Verify	Enable or disable the verification of data written on tag.
PREND Type 3/4	Select Normal or Motion.
Antenna Operation Check	Check the antenna operation.
SRA	ON: Automatic position adjustment ON Label automatic length measurement ON or OFF OFF: Label automatic length measurement ON or OFF * SRA stands for SATO RF Analyze.

2.6.4 WiFi Ex-Setting

1 Select [Service] > [WiFi Ex-Setting].

Menu	Description
Region	Set the region.
Roaming Adjust	Enable or disable the Wi-Fi roaming adjustment. Threshold: Set the roaming threshold level. Difference Threshold: Set the difference for the roaming threshold.
Supplicant Log Level	Set the log type.
BadAP-list	Enable or disable BadAP-list.
Supplicant Timeout	Set a period of time for the EAP authentication timeout.
KeepAlive	Set the interval for sending a KeepAlive packet to a connected device.

2.6.5 Position Check

1 Select [Tools] > [Position Check].

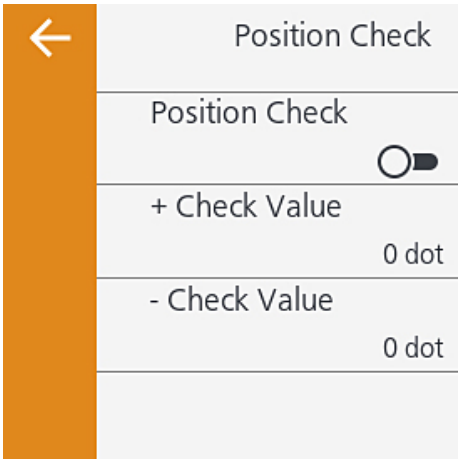

After turning on the printer or closing the print head, the printer measures the media pitch size printed on the second label, and compare it with the subsequent media pitch sizes to detect the printing position deviation. When a print position deviation exceeding the setting range is detected, “Media Error” is displayed.

Enable checkbox	Enable or disable the position check. (Default: disabled) Disabled: Disables the detection of the position check. Enabled: Enables the detection of the position check.
+ Check Value	Set the allowable offset range in the direction opposite to the media feed direction.
– Check Value	Set the allowable offset range in the media feed direction.

Setting range: –60 to 60 dots (Default: 0 dots)

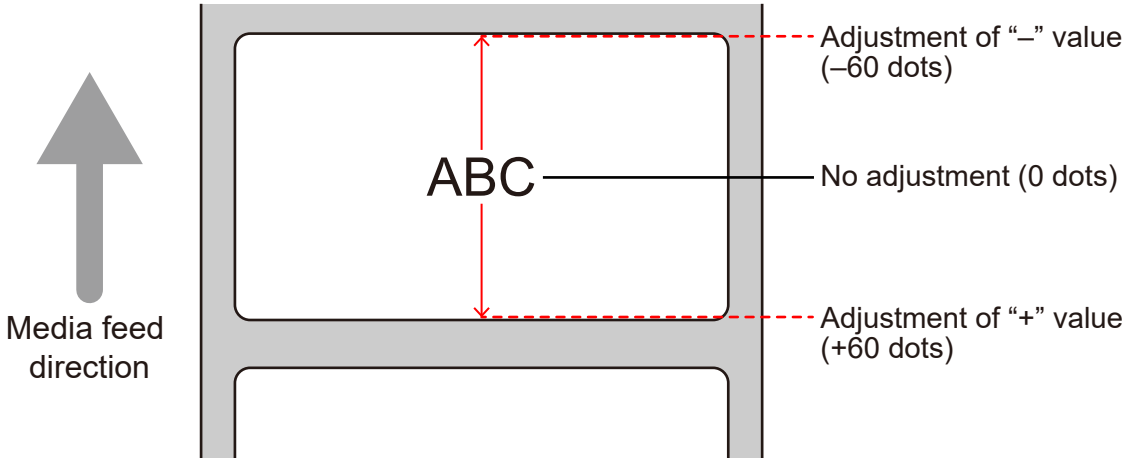

2.6.6 Factory Offset

1 Select [Tools] > [Factory Offset].

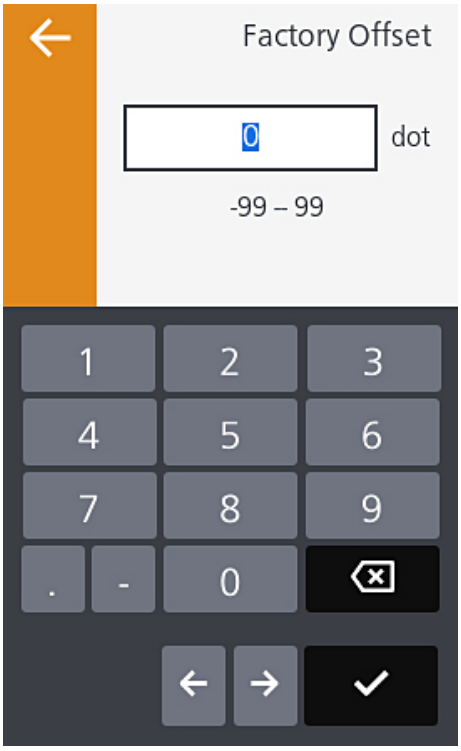

CAUTION

The factory offset is originally set in the factory during adjustment before shipping.

Therefore, do not perform the factory offset adjustment unless you have replaced the MAIN (CONT) PCB with a new one or you cannot adjust the media stop position/cut position with the offset settings in the [Printing] menu.

Correct the offset position.

Set the offset value “+” to move the stop position in the direction opposite to the media feed direction and value “–” to move the stop position in the media feed direction.

Offset position refers to the tear-off position, cut position and dispense stop position.

Setting range: –99 to 99 dots (Default: 0 dots)

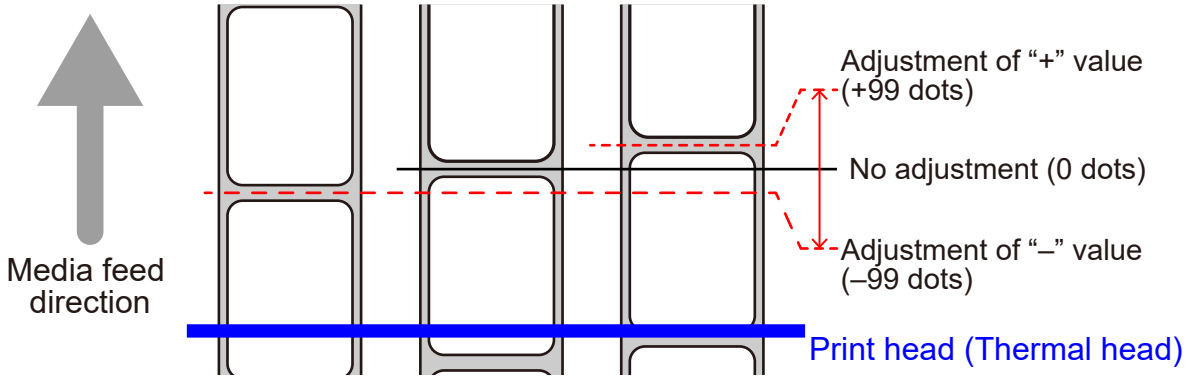

Note

- The actual offset position is the sum of the offset value set here and the offset value set for print position, in Service menu.
- When you change the offset value in the Service menu, the offset value set at factory shipment also changes.

2.6.7 Factory Pitch

1 Select [Tools] > [Factory Pitch].

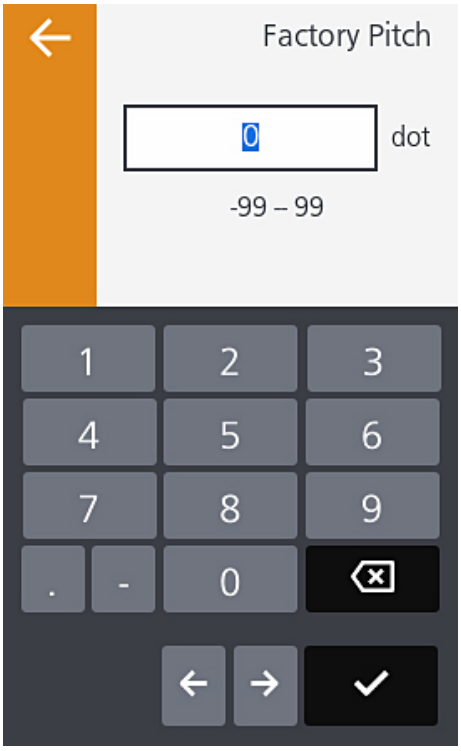

To shift the print position in the vertical direction.

Set the print position “+” to move the position in the direction opposite to the media feed direction and value “–” to move the position in the media feed direction.

Setting range: –99 to 99 dots (Default: 0 dots)

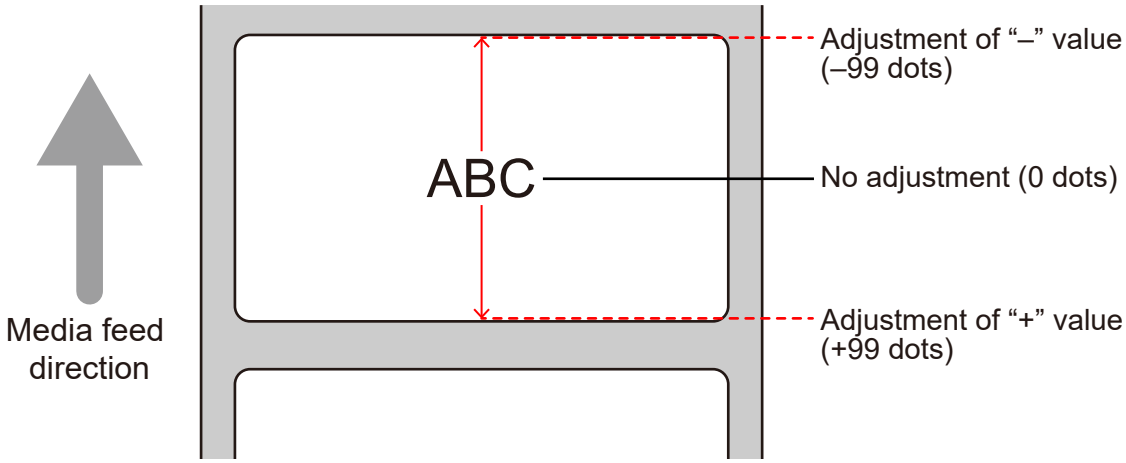

Note

- The actual offset of the print position in the vertical direction is the sum of the offset value and the print position offset value set in Service menu.
- When you change the value in the Service menu, the value set at factory shipment also changes.

2.6.8 Factory Label Top Adjust

1 Select [Tools] > [Factory Label Top Adjust].

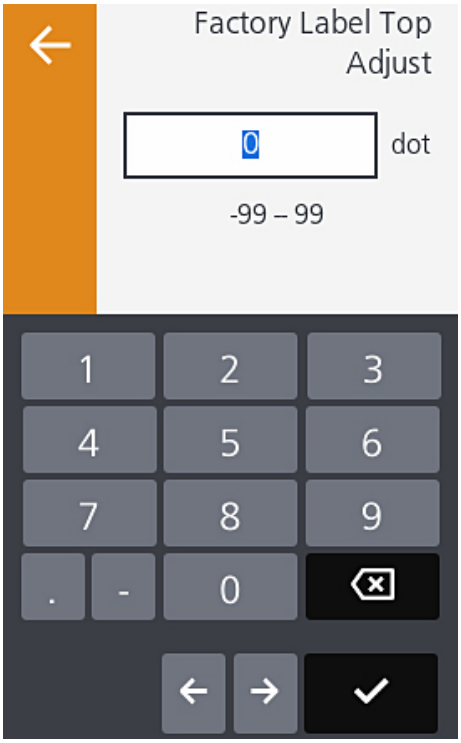

Correct the label top position.

Set the print position “+” to move the position in the direction opposite to the media feed direction and value “–” to move the position in the media feed direction.

Setting range: –99 to 99 dots (Default: 0 dots)

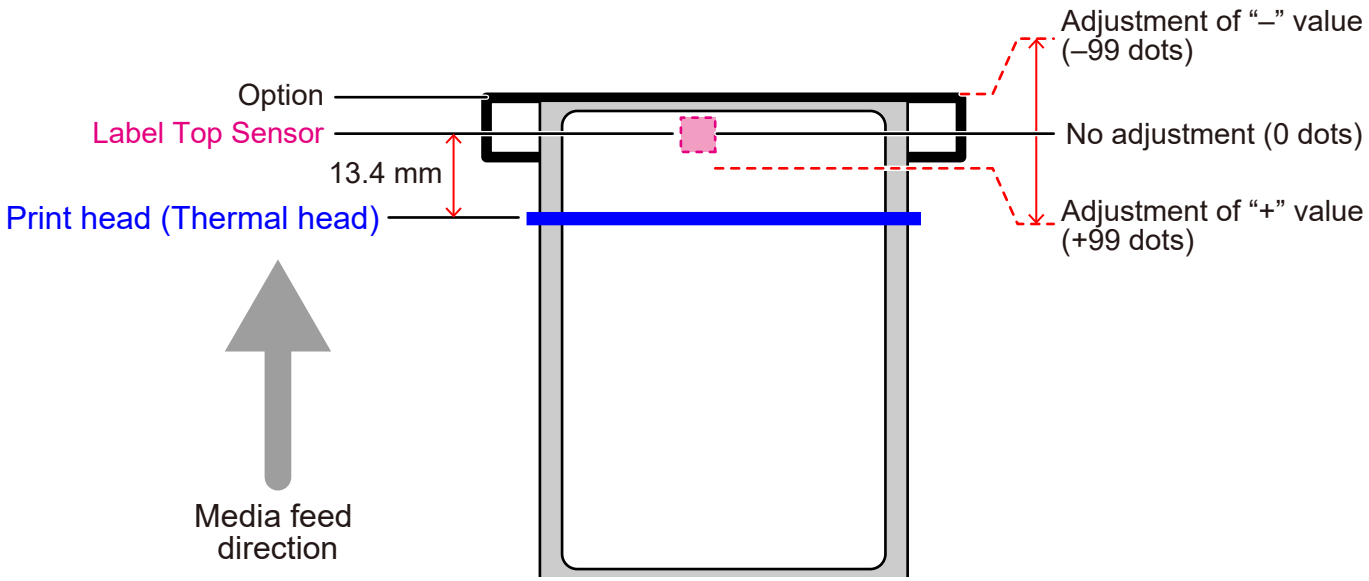

Note

- For the linerless model or in Dispenser mode, the factory label top sensor does not work.
- The minimum pitch that can perform the label waste prevention process (back feed) is 20 mm.
- Even if the factory offset or factory pitch is adjusted, it is not necessary to adjust the factory label top sensor.

2.6.9 Check Communication

1 Select [Tools] > [Check Communication].

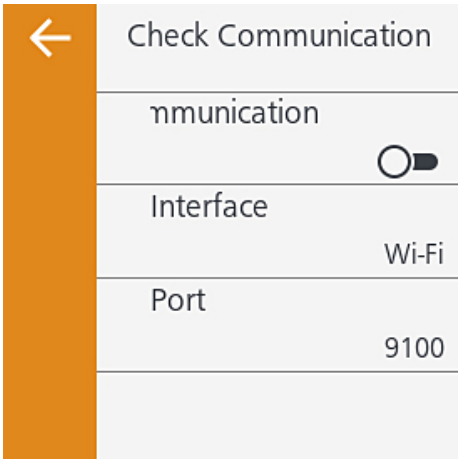

Item	Description
Check Communication	Executes packet capture for the specified port on the specified interface.
Interface	Select wired or Wi-Fi.
Port	Set the port number.

* The above can be checked using the SOS function. For details, refer to the SOS operator manual.

2.6.10 Position Check

1 Select [Service] > [Position Check].

2 Tap [Start].



3 Tap the red crosshair mark four times.

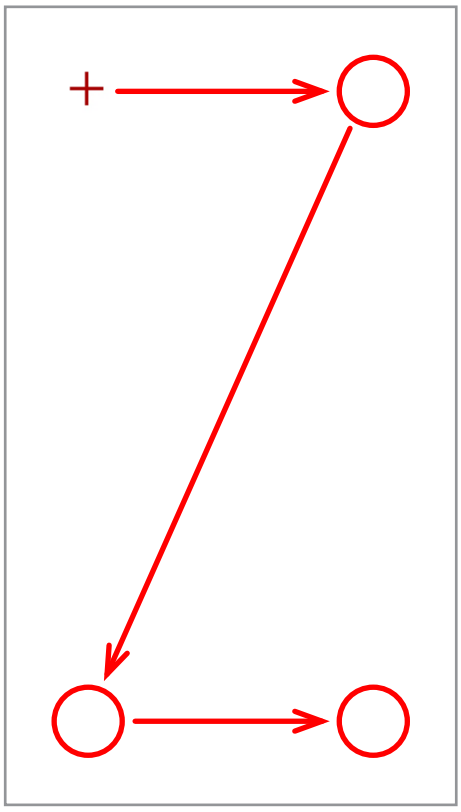

4 The result is displayed.

OK	NG
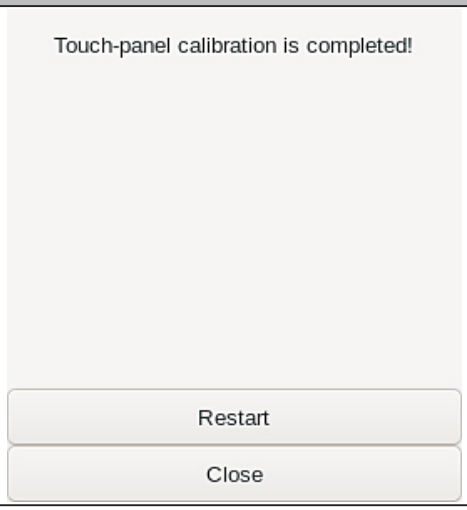	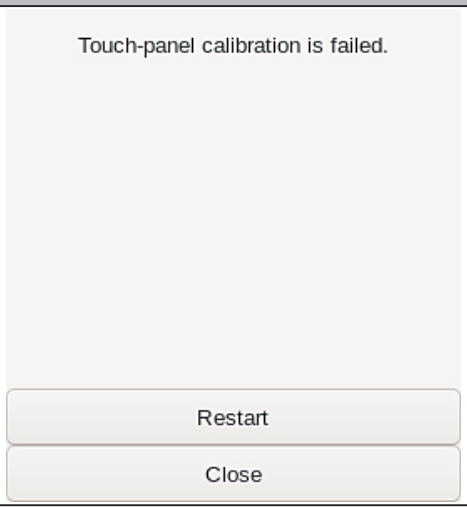

2. 7 Checking and Updating the Firmware

2.7.1 Checking the Firmware

1 Select [Information] > [Build Version].

Check the version name.

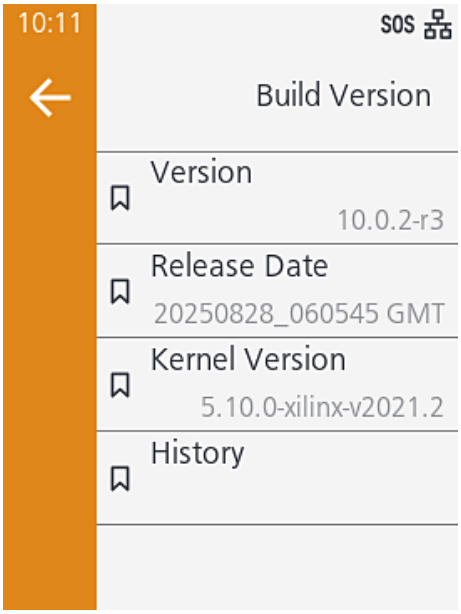

2.7.2 Updating the Firmware

CAUTION

Be sure to perform a virus check for the USB memory before connecting it to the printer.

1 Prepare the pkg file for the version you want to update to and copy it to the root directory of the USB memory.

2 Make sure that the printer is powered off, and insert the USB memory into the front USB connector.

3 Power on the product.

4 The version to be updated is displayed.

5 Select [✔] to start the update.

6 When the update is complete, the product automatically restarts.

3 Checking and Performing Printer Adjustments

Back to top

This chapter describes the following:

3. 1 Checking Before Starting Work

3.1.1 Checking Printing with Actual User Data

3.1.2 Checking Installation Environment and Printer Conditions

3.1.3 Checking Printing with Factory Settings

3. 2 Checking and Cleaning

3.2.1 Checking and Cleaning Optional Units

3.2.2 Checking and Cleaning the Exterior

3.2.3 Blowing Air on the PCBs

3. 3 Checks and Adjustments

3.3.1 Auto-calibration

3.3.2 Adjusting the Gap Sensor Manually

3.3.3 Adjusting the I-mark Sensor Manually

3.3.4 Checking and adjusting the Label Top Sensor

3.3.5 Printing Quality

3.3.6 Meandering

3.3.7 Checking and Adjusting the Print Position

3.3.8 Checking the Stop Position

3. 4 Final Check

3.4.1 Checking Test Print with Factory Settings

3.4.2 Checking the Customer's Layout

3.4.3 Checking Barcode Scan

3.4.4 Checking SOS Connection

3.4.5 Returning to the Original State

3. 1 Checking Before Starting Work

This section describes the items to be checked before starting work.

3.1.1 Checking Printing with Actual User Data

1 min

Make sure to perform print check using actual user data.

Note

When multiple layouts are used for printing, make sure to check for every layout.

Check & Point

① Is the print position correct in the horizontal and vertical directions?

② Is the print quality good? Make sure no blurred printing occurs in the horizontal and vertical directions and also no sticking occurs.

③ Is the media stop position correct?

3.1.2 Checking Installation Environment and Printer Conditions

1 min

Check the user's printer usage environment, label placing conditions, etc.

Check & Point

① Is the label placed in the proper position?

② Is there any excessive load on the routed wirings?

③ Are the date and time set correctly when the optional RTC kit is installed?

④ Is there any problem with the label expiration date?

⑤ Is the genuine label used?

3.1.3 Checking Printing with Factory Settings

2 min

Before starting work, perform the test print and check for print position, counter information, sensor levels, etc.

1 Place the label of 110 mm width on the printer.

CAUTION

Since the effective print width is 104 mm, if you use a label of less than 110 mm wide, print missing occurs on both ends.

2 Select [Settings] > [Tools] > [Test Print] > [Factory] > [Printing].

3 After printing multiple labels, touch [||] to stop the printing and then touch [×].

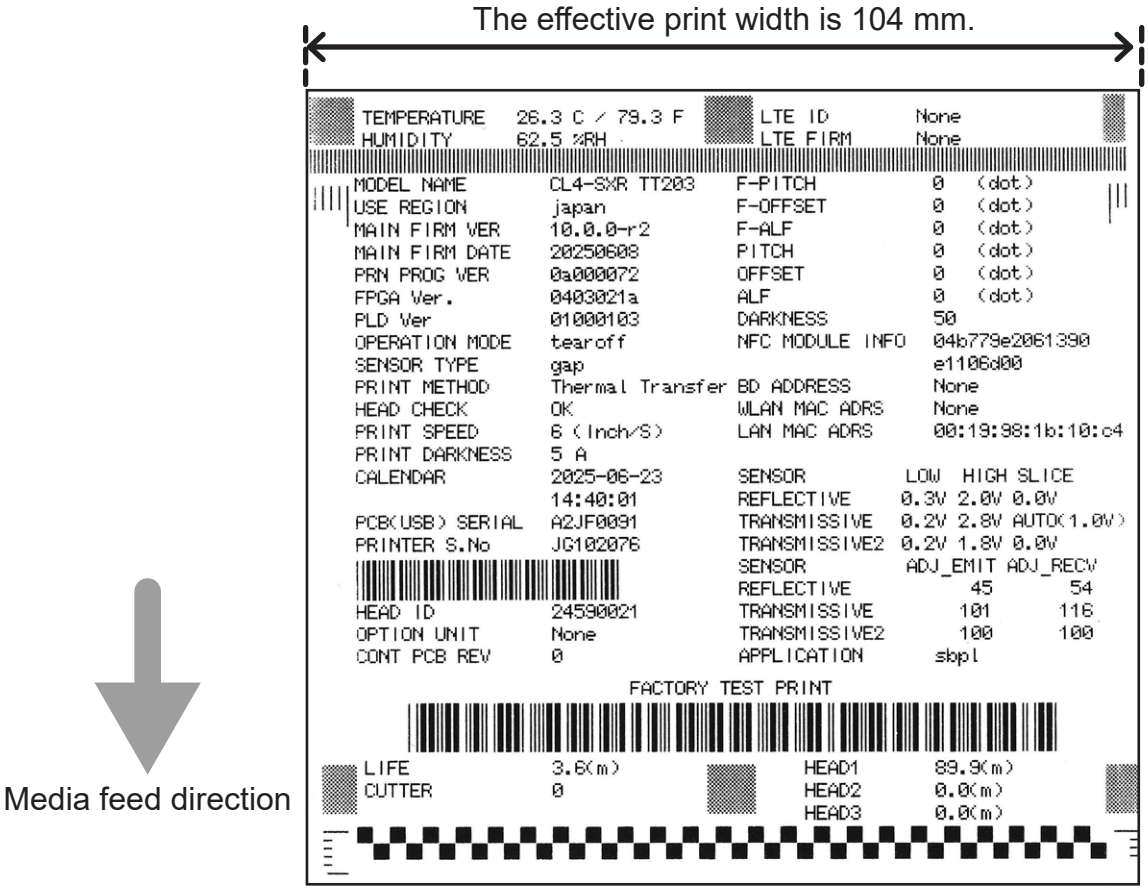

Check & Point

① Is there any abnormal noise?

② Check the print position and stop position.
Print on multiple labels and check that the position of each block is stable.

③ Firmware version
Update the firmware version as required.

④ Check the cutter and head counter information.

⑤ Check the sensor levels.
If the sensor level is outside of the following range, adjust the sensor level.

Voltage	REFLECTIVE	TRANSMISSIVE
LOW	0.5 V or less	
HIGH	High – Low ≧ 1.0 V	

Refer to 3.3.2 Adjusting the Gap Sensor Manually

Refer to 3.3.3 Adjusting the I-mark Sensor Manually

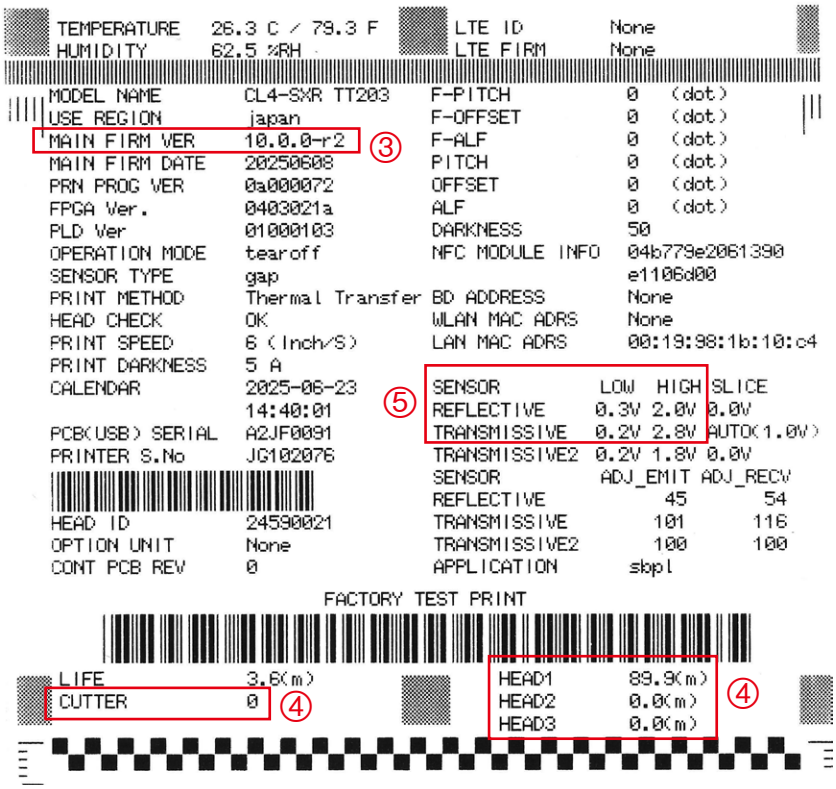

3. 2 Checking and Cleaning

While cleaning parts, perform the relevant checks.
Remove media and ribbon if loaded.

CAUTION

- Never use organic solvents such as thinner or benzene.
- The print head (thermal head) and its surroundings are hot after printing. Be careful not to touch them until they get cool.

1 Wipe off any dirt from the areas painted red shown below with a printer cleaning sheet or a cotton cloth soaked in cleaning solution.

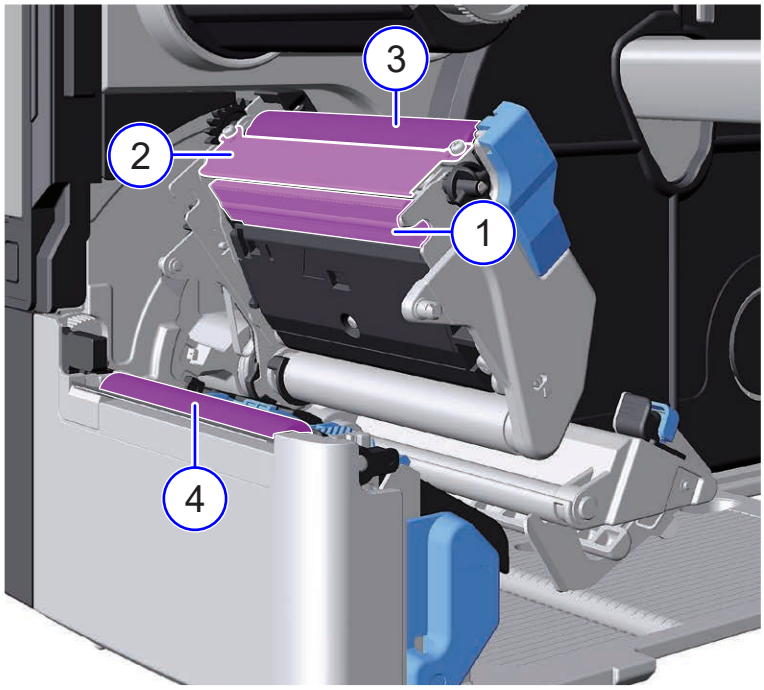

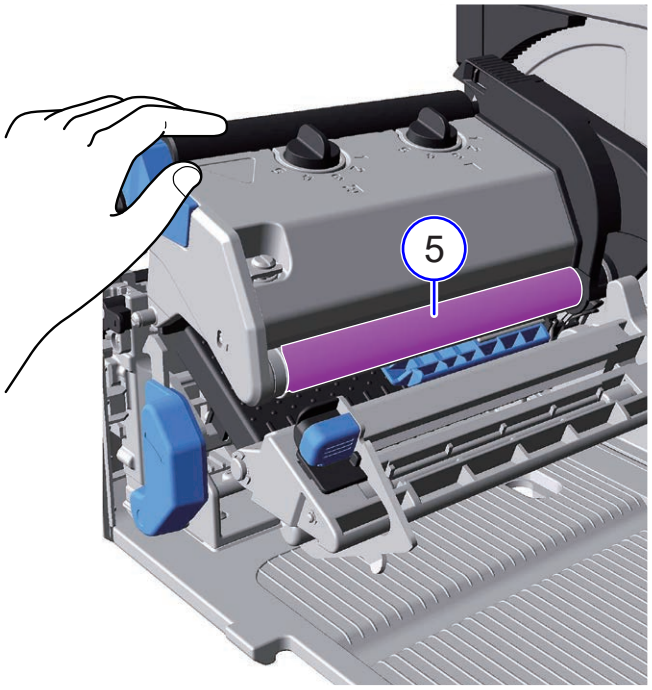

① PRINT HEAD (Thermal Head)
② RIBBON ADJ PLATE
③ RIBBON FEED ROLLER
④ PLATEN ROLLER
⑤ RIBBON PIPE

Check & Point

- **PRINT HEAD (Thermal Head), PLATEN ROLLER**

Check the counter before cleaning. If the counter value is close to the guaranteed value, check the platen roller and, if it is worn out, replace it with a new one.

2 Lower the media sensor guide lock (⑥) and pull out the media sensor guide (⑦) to remove it.

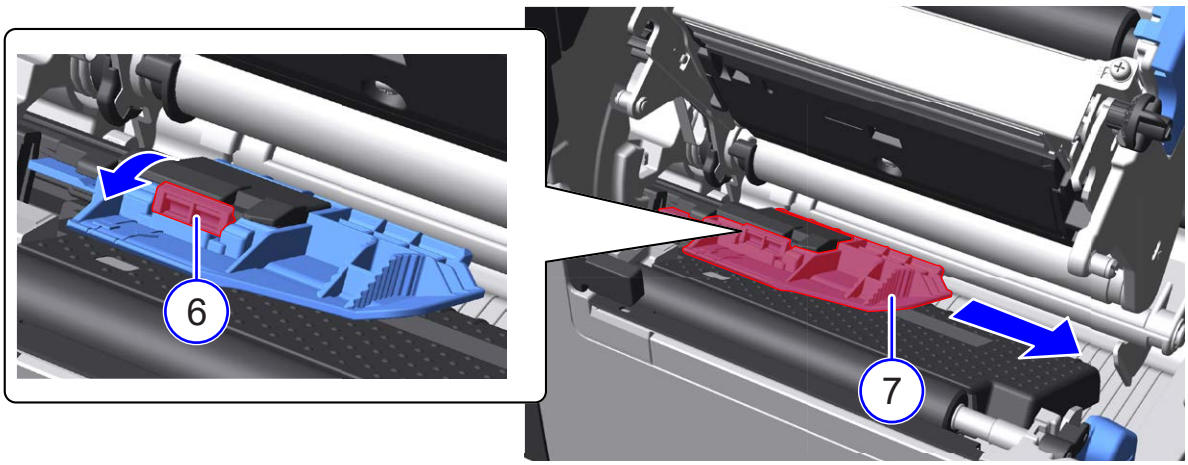

3 Wipe the bottom of the media sensor guide with a cotton cloth soaked in cleaning solution.

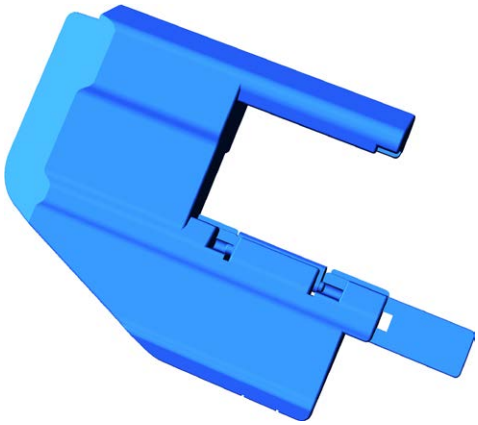

4 Wipe the media sensor (8) with a cotton cloth soaked in cleaning solution.

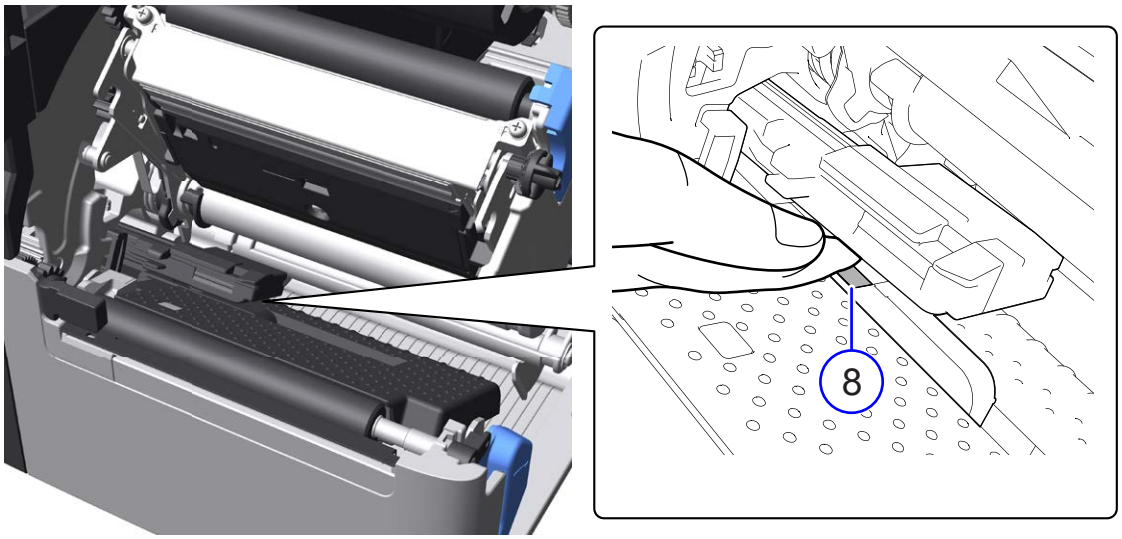

5 Assemble the media sensor guide by reversing the disassembly procedure in step 2.

3.2.1 Checking and Cleaning Optional Units

1 min

Clean the optional units.

Check & Point

Check the counters before cleaning. If the counter value is close to the guaranteed value, check the optional unit and, if it is worn out, replace it with a new one.

3.2.2 Checking and Cleaning the Exterior

1 min

Clean the LCD and exterior.

Check & Point

① Check that no cracks or breakage appear on the exterior before cleaning.

② Check that the touch panel works properly.

③ Check that the power/home button works properly.

3.2.3 Blowing Air on the PCBs

1 min

Blow air on the PCB to remove dust or dirt.

CAUTION

Before cleaning the PCB, make sure to power off the printer. Next, unplug the AC power cord.

Check & Point

① Is the connector loose?

② Is the screw loose?

③ Is the cable caught?

④ Is the gear broken or worn out?

3. 3 Checks and Adjustments

Check respective items before starting work. For the item judged to be adjusted, perform necessary adjustments.

3.3.1 Auto-calibration

2 min

1 Select [Printing] > [Advanced] > [Sensor Adjustments] > [Auto Calibration].

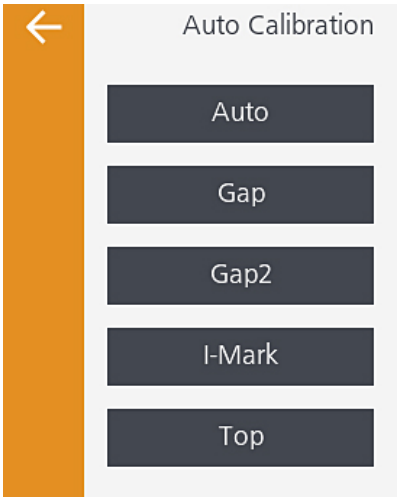

2 Remove the labels from the liner and set the liner.

3 Press the print head down until the head lock lever is locked.

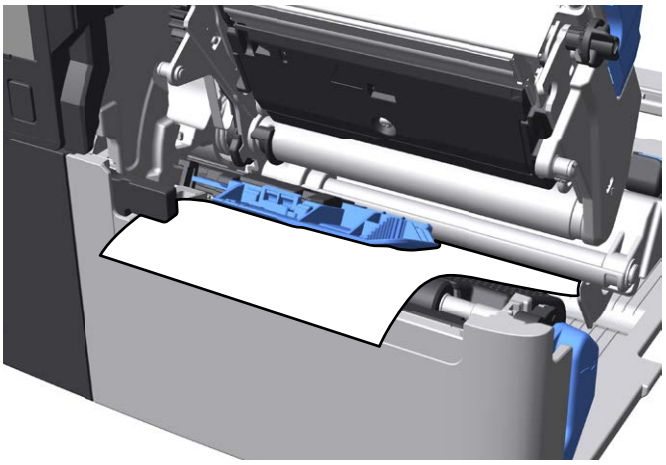

4 Touch [Auto].

5 Touch [✔]. Then, the auto calibration is automatically performed and the result is displayed.

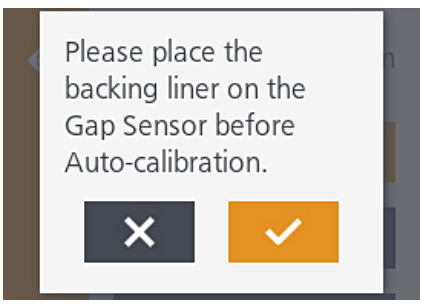

Note

If "Failed" is displayed, place the liner correctly and perform the auto-calibration operation again.

The I-mark slice level is automatically adjusted by the following formula.

I-mark slice level = (High level – Low level) × 0.7 + Low level

3.3.2 Adjusting the Gap Sensor Manually

2 min

1 Remove the labels from the liner and set the liner.

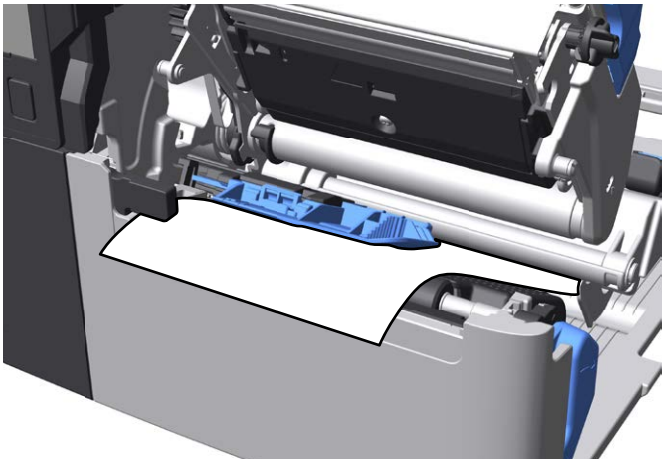

2 Select [Printing] > [Advanced] > [Sensor Adjustments] > [GAP Levels].

3 Check and adjust the sensor low level and note the low level value.

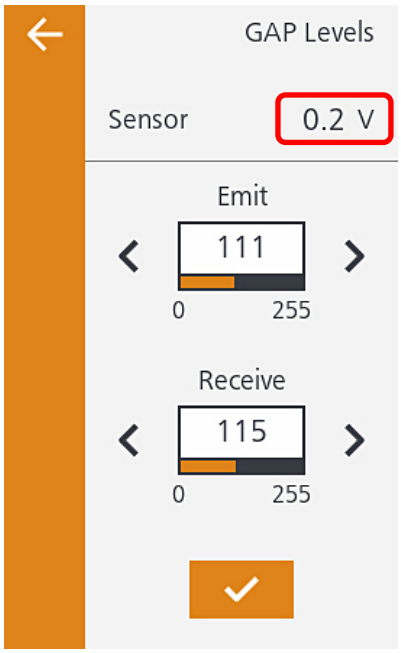

Check

Check that the sensor Level is less than 0.5 V.

Adjustment

Adjust the sensor level by changing the value of the Emit level.

If the sensor level does not fall below 0.5 V, adjust it by changing the value of the Receive level.

4 With the screen as is, place the liner with labels.

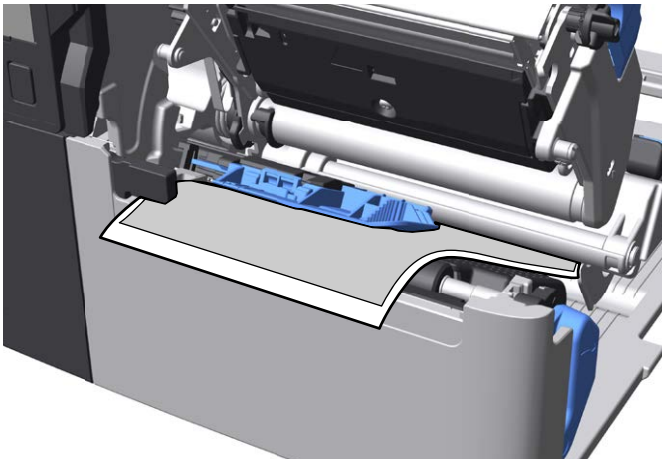

5 Check and adjust the sensor high level and note the high level value.

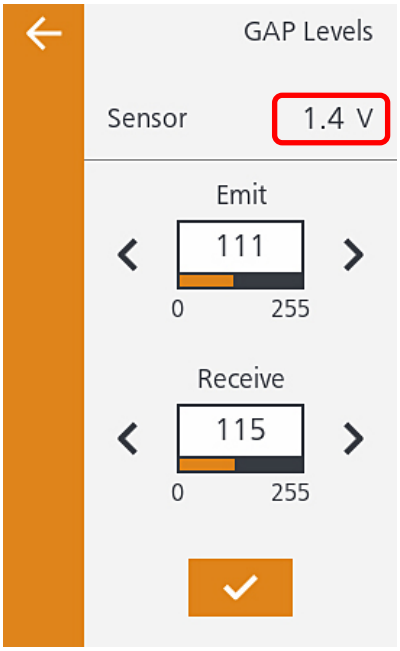

Check

Check that the sensor level satisfies the following conditions.

High level – Low level 1.0 V

The Low level is below 0.5 V.

Adjustment

Adjust the sensor level by changing the value of the Emit level and Receive level.

6 Select [Sensor Adjustments] > [GAP Slice Level].

7 You can set the slice level arbitrarily.

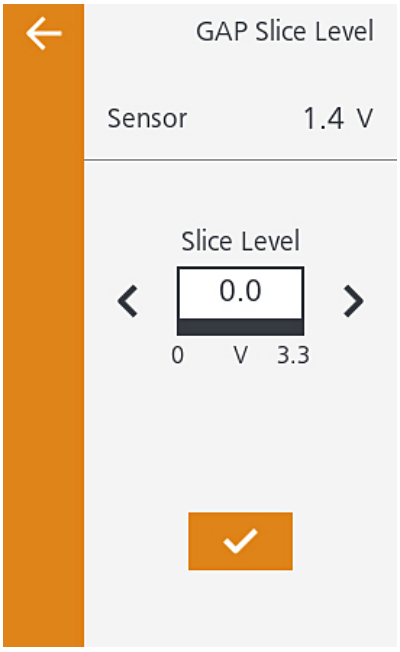

Note

When the slice level is 0, the slice level is automatically set.

3.3.3 Adjusting the I-mark Sensor Manually

2 min

1 Place the label so that the I-mark does not cover the I-mark sensor.

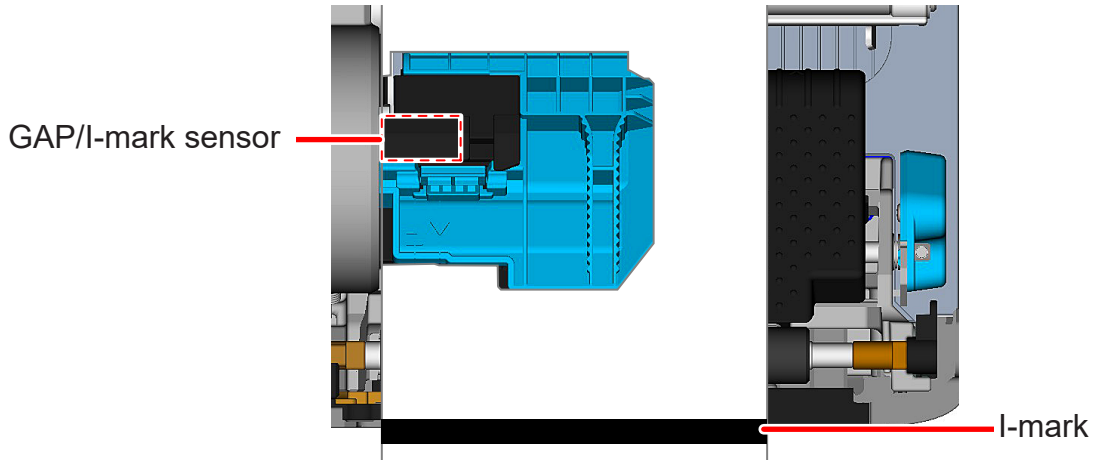

2 Select [Calibrate] > [I-Mark Levels].

3 Check and adjust the sensor low level and note the low level value.

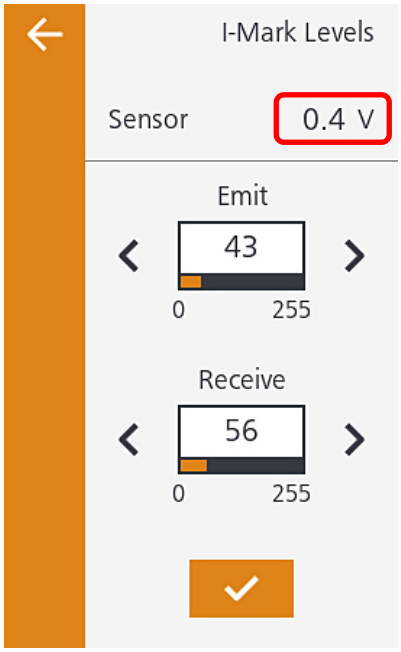

Check

Check that the sensor level is less than 0.5 V.

Adjustment

Adjust the sensor level by changing the Send I-Mark Level.

If you cannot set the sensor level to less than 0.5 V, change the Receive I-Mark Level.

4 Without changing the screen, place the liner so that the I-mark on the liner is right on the I-mark sensor.

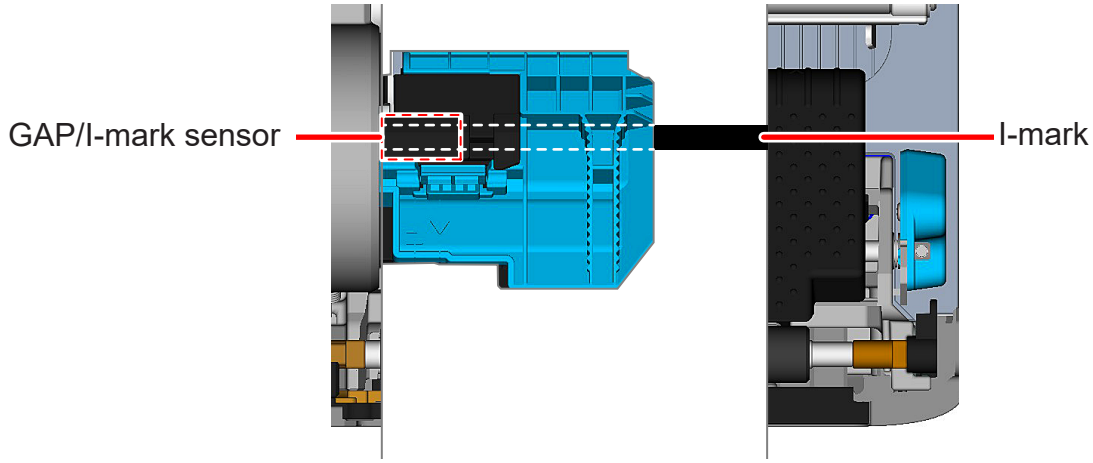

5 Check and adjust the sensor high level and note the high level value.

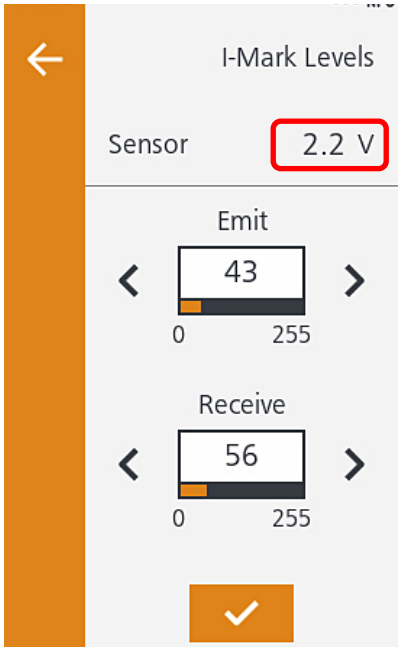

Check

Check that the sensor level satisfies the following condition.

High level (I-mark sensor) – Low level 1.0 V

Adjustment

Adjust the sensor level by changing the Send Gap Level and Receive Gap Level.

6 Select [Calibrate] > [I-Mark Slice Level].

7 You can set the slice level arbitrarily.

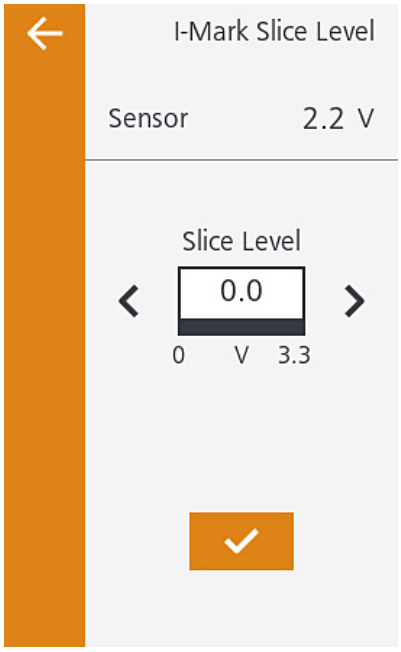

Note

When the slice level is 0, the slice level is automatically set.

3.3.4 Checking and adjusting the Label Top Sensor 2 min

1 Select [Printing] > [Advanced] > [Sensor Adjustments] > [Auto Calibration].

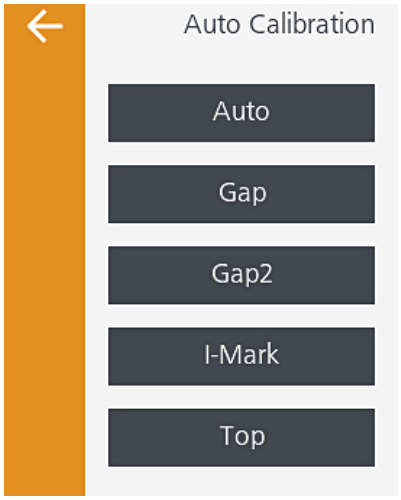

2 Remove the labels from the liner and place the liner on the label top sensor.

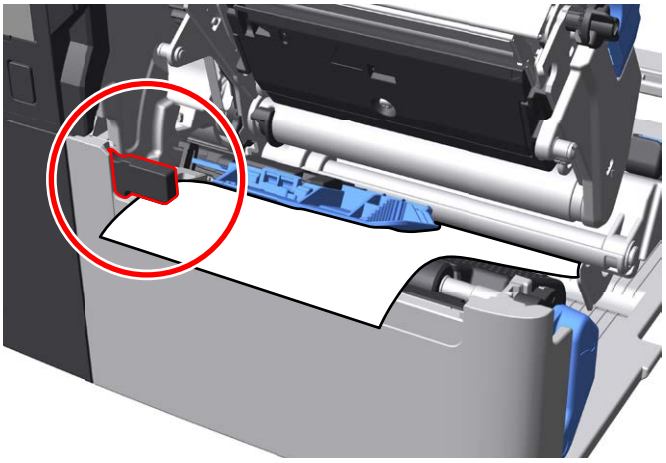

3 Touch [Top].

4 Touch [✔]. Then, the auto calibration is automatically performed and the result is displayed.

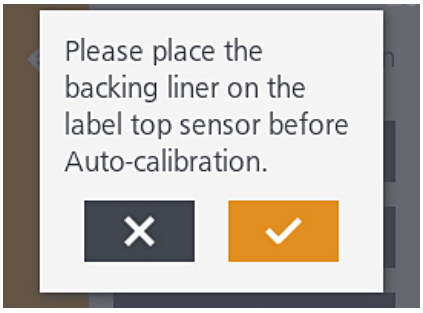

Note

If "Failed" is displayed, place the liner correctly and perform the auto-calibration operation again.

3.3.5 Printing Quality

2 min

Perform the test print with the factory settings and check that there is no problem with printing quality.

1 Place the label of 110 mm width on the printer.

CAUTION

Since the effective print width is 104 mm, if you use a label of less than 110 mm wide, print missing occurs on both ends.

2 Select [Settings] > [Tools] > [Test Print] > [Factory] > [Printing].

3 After printing multiple labels, touch [||] to stop the printing and then touch [×].

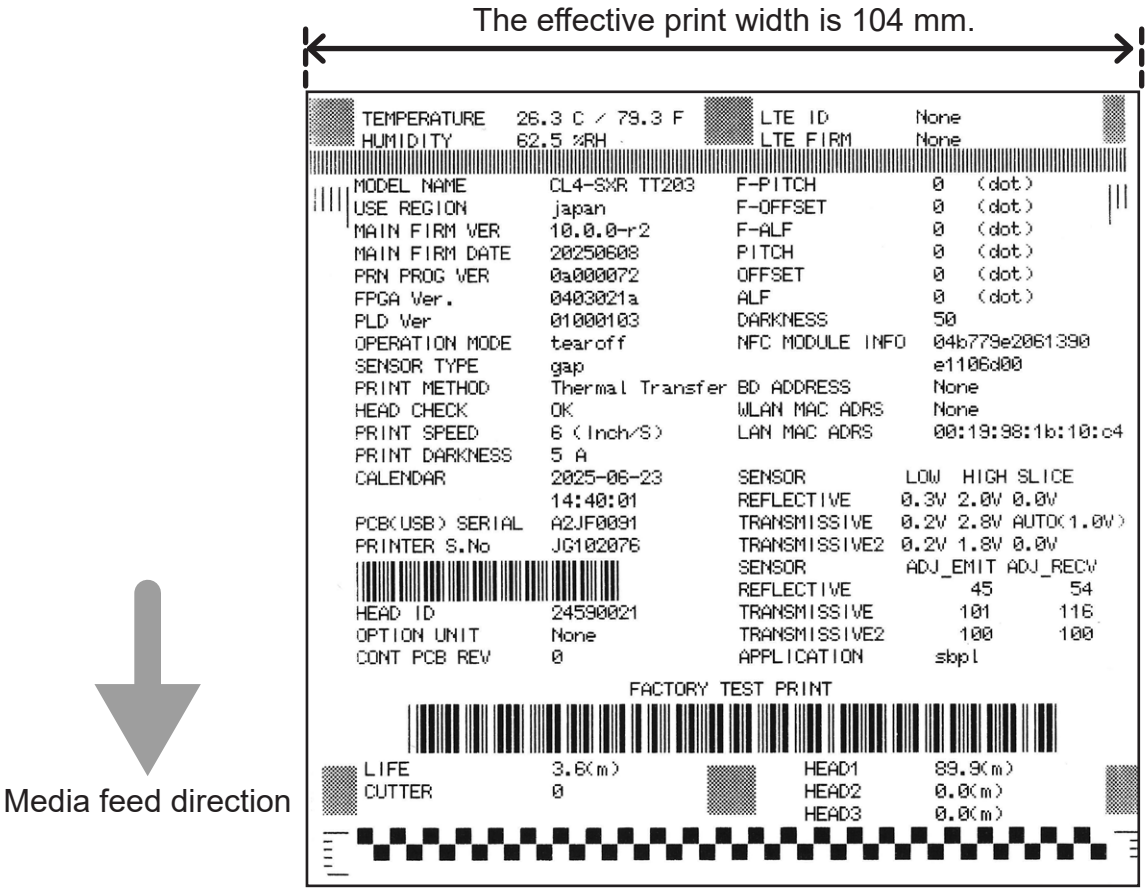

Check & Point

① Is there any quality degradation compared with the test print before starting work?

② Is the print quality uniform?

If the print quality is not uniform and hard to correct, lower the print darkness, and then check the test print results again.

③ Is printing shrunk

Pay attention to the ruled lines. If the ruled lines are missing, check the drive part as it may be the cause.

3.3.6 Meandering

1 min

Perform the test print with the factory settings and check that the printing is not meandering in horizontal direction.

Check & Point

① Is the media meandering?
If you cannot eliminate the meandering, replace the roller.

② After installing all the units, check for meandering again.

3.3.7 Checking and Adjusting the Print Position

1 min

Perform the test print with the factory settings and check that no print position deviation occurs. If it occurs, perform adjustment to correct it.

Note

When you have adjusted the sensor levels, be sure to check the print position.

Check & Point

Check that the print position on the 1st and 3rd labels is stable.
If the problem persists, perform sensor adjustment again and recheck the roller, etc.

3.3.8 Checking the Stop Position

1 min

Perform the test print with the factory settings and check that no stop position deviation occurs. If it occurs, perform adjustment to correct it.

Note

When you have adjusted the sensor levels, be sure to check the stop position.

Check & Point

① Check that the stop position on the 1st and 3rd labels is stable.

② No print skips occurs.
If the problem persists, perform sensor adjustment again and recheck the roller, etc.

3. 4 Final Check

3.4.1 Checking Test Print with Factory Settings

1 min

After finishing work, make sure that you haven't accidentally changed something.

Check & Point

① All setting items

② Print position

③ Stop position

Note

If there is an item unable to check, check it with the internal setting information, as required.

3.4.2 Checking the Customer's Layout

1 min

Ask the customer to print out with actual data, and make sure that there is no problem with the layout.

3.4.3 Checking Barcode Scan

1 min

When the customer's layout includes barcodes, QR codes, etc., perform readout checks to make sure that a scanner can read them correctly.

3.4.4 Checking SOS Connection

5 min

Check the SOS connection status and take an appropriate action according to the connection type.

Check & Point

① On demand	Read an error code.
② Real time	Check that there is no problem with the communication state.

3.4.5 Returning to the Original State

3 min

Check that the printer configuration is the same as that before starting the service work.

4 Replacement

Back to top

The replacement procedures described in this chapter are as follows:

4. 1 Notes on Replacing Parts

4. 2 Cover

4.2.1 Replacing the OPEN COVER, COVER L

4.2.2 Replacing the FRONT COVER

4. 3 Printing Section

4.3.1 Replacing the Print Head (Thermal Head)

4. 4 Paper Transfer Section

4.4.1 Replacing the Platen Roller

4.4.2 Replacing the Torque Limiter for Ribbon Supply Spindle

- Torque Limiter for Ribbon Supply Spindle
- BF SPRING

4.4.3 Replacing the GEAR FRAME ASSY

- Timing Belt
- Motor Pulley
- Torque Limiter for Ribbon Rewind Spindle

4. 5 Sensor

4.5.1 Replacing the Gap Sensor

CAUTION For RFID models, the sensor cannot be replaced separately.

- GAP TR IM PCB
- GAP D PCB
- GAP2 TR IM PCB
- GAP2 D ASSY

4.5.2 Replacing the Top Sensor

4.5.3 Replacing the Ribbon Sensor

4.5.4 Replacing the Label Near End Sensor

4.5.5 Replacing the Head Open Sensor

4. 6 PCBs and Electrical Parts

4.6.1 Replacing the CONT PCB

4.6.2 Replacing the ENGINE PCB

4.6.3 Replacing the CONTROL PANEL ASSY

4.6.4 Replacing the USB PCB

4.6.5 Replacing the Power Supply Unit

4.6.6 Replacing the Coin Battery (CR2032)

4. 1 Notes on Replacing Parts

- The description in this manual may differ from the actual product due to design changes, etc.
- Unplug the power cord before starting work.
- Remove paper or ribbon when it is loaded.
- Use a screwdriver that matches the size of the screw head.
- Assemble the parts in the reverse order of the disassembly procedure.
- When assembling parts, do not pinch cables or wires.
- Replace tapes and stickers with new ones depending on their condition.
- There are several types of screws, so be careful not to make a mistake when assembling them. It is convenient to sort the screws when removing, as shown in the figure below.



- The following icons are used in this chapter.

Time required for replacement	Indicate the approximate period of time from when you start removing parts until when you finish assembling them.

4. 2 Cover

4.2.1 Replacing the OPEN COVER, COVER L

5 min.

Required tools :

- Phillips screwdriver (#2)

1 Remove two screws (S1) and remove the OPEN COVER (①).

CAUTION
The OPEN COVER is heavy, so be careful not to drop it when removing/installing it.

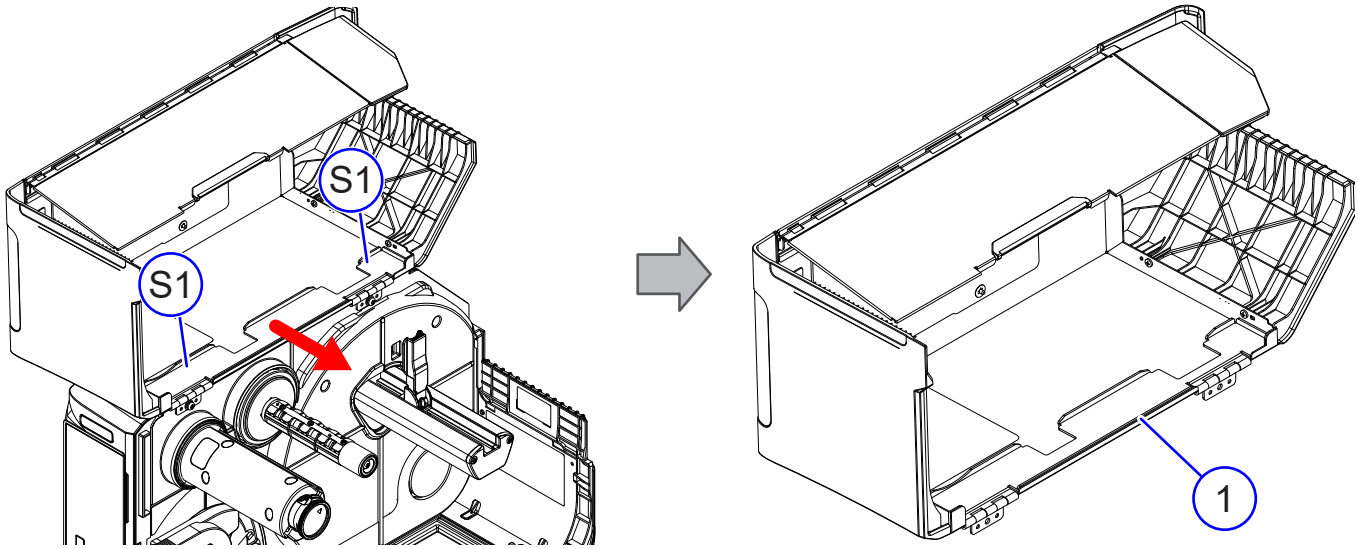

2 Remove one screw (S1).

3 Slide the COVER L (②) and remove it.

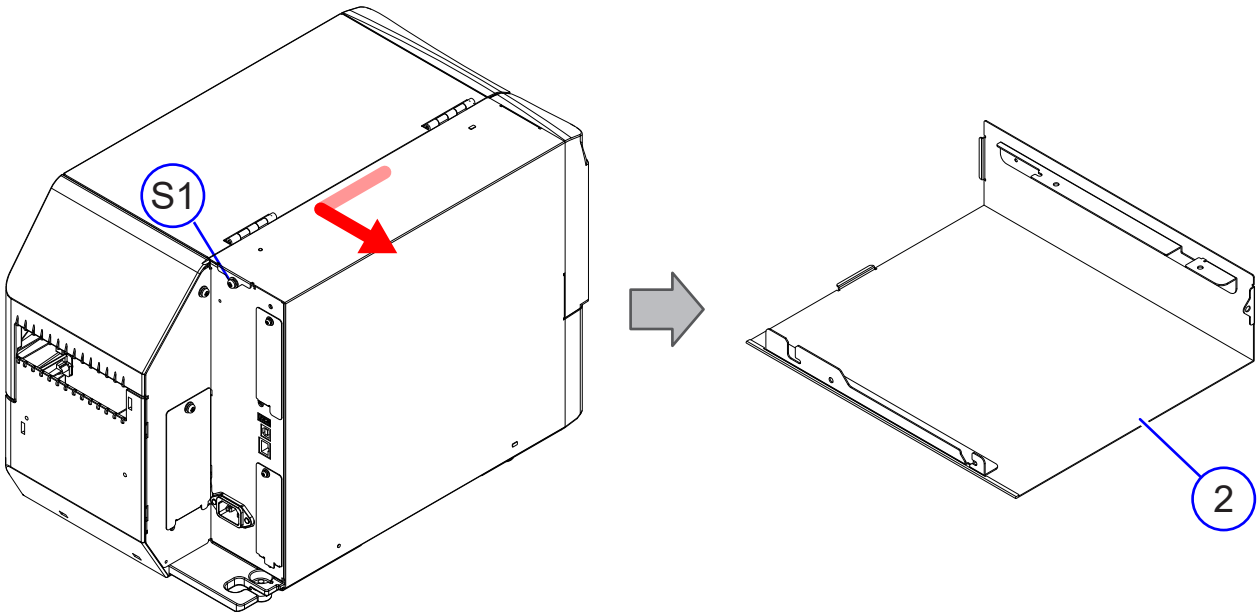

4.2.2 Replacing the FRONT COVER

5 min.

Required tools :

- Phillips screwdriver (#2)

1 Open the OPEN COVER (①)

2 Remove two screws (S4).

3 Remove the FRONT COVER R (②) and FRONT COVER L (③) in that order.

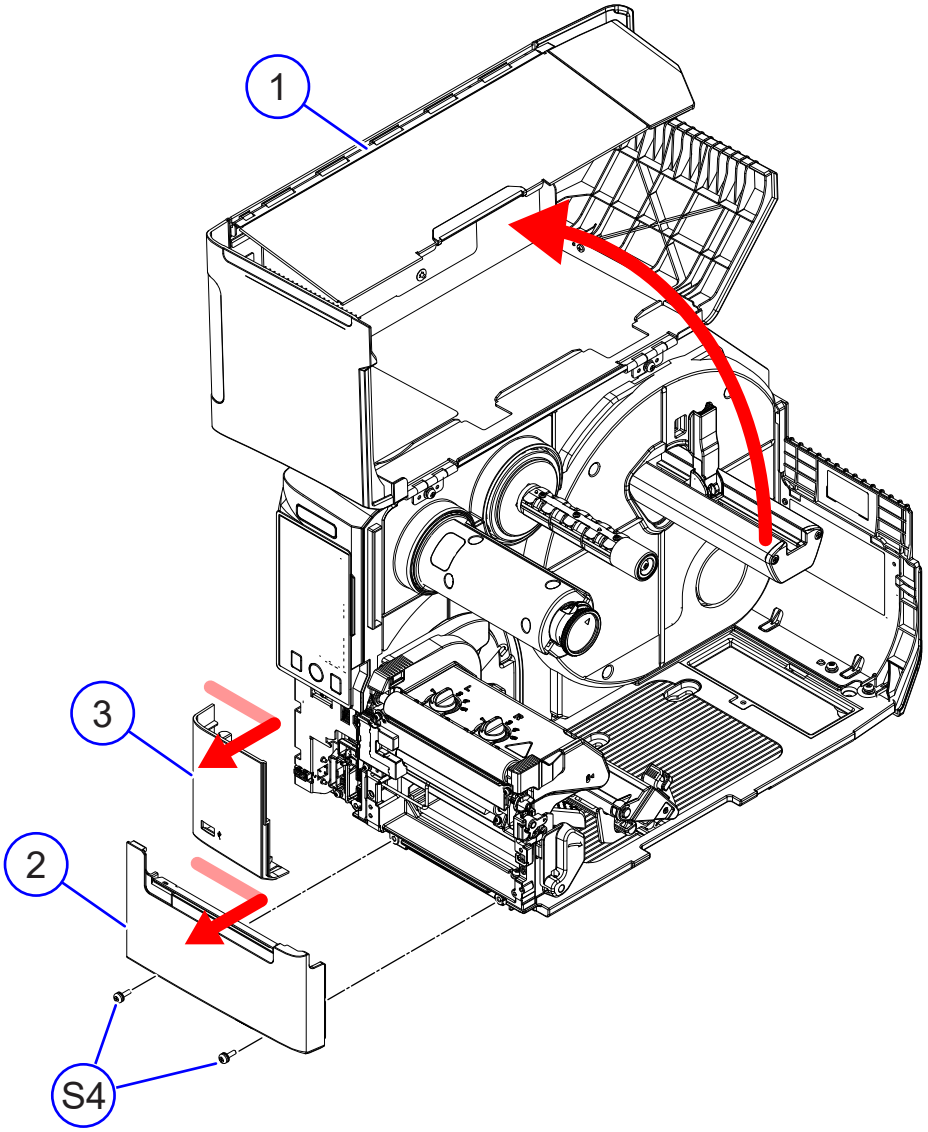

4. 3 Printing Section

4.3.1 Replacing the Print Head (Thermal Head)

5 min.

Required tools :

- Ethanol

CAUTION

The print head (thermal head) and its surroundings are hot after printing.
Be careful not to touch them until they get cool.

1 Open the OPEN COVER (①)

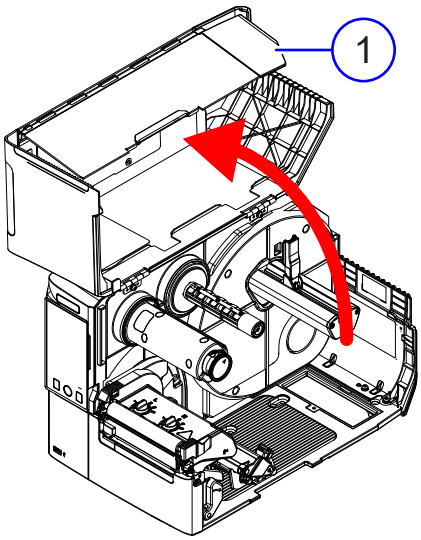

2 Push the head lock lever (②) towards the rear to unlock the print head.

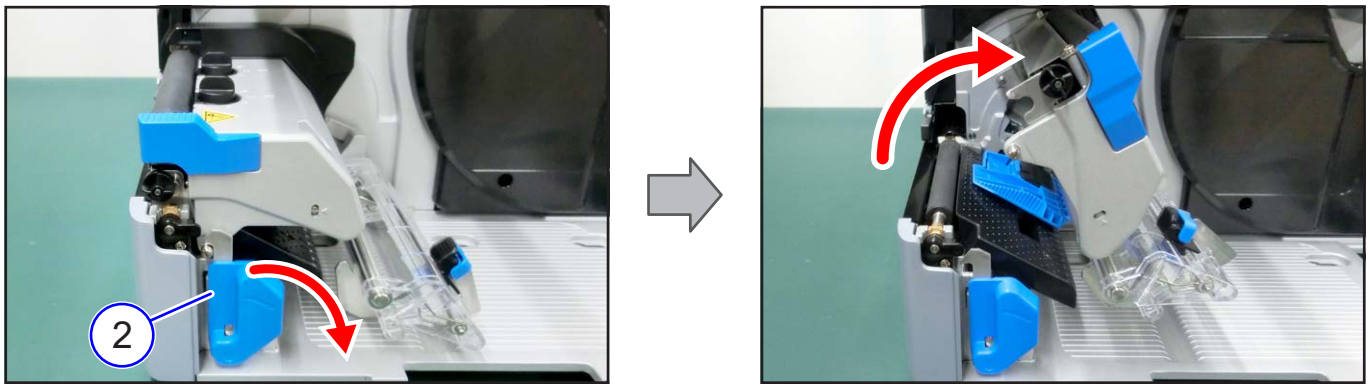

3 Push the lever (③) from the side.

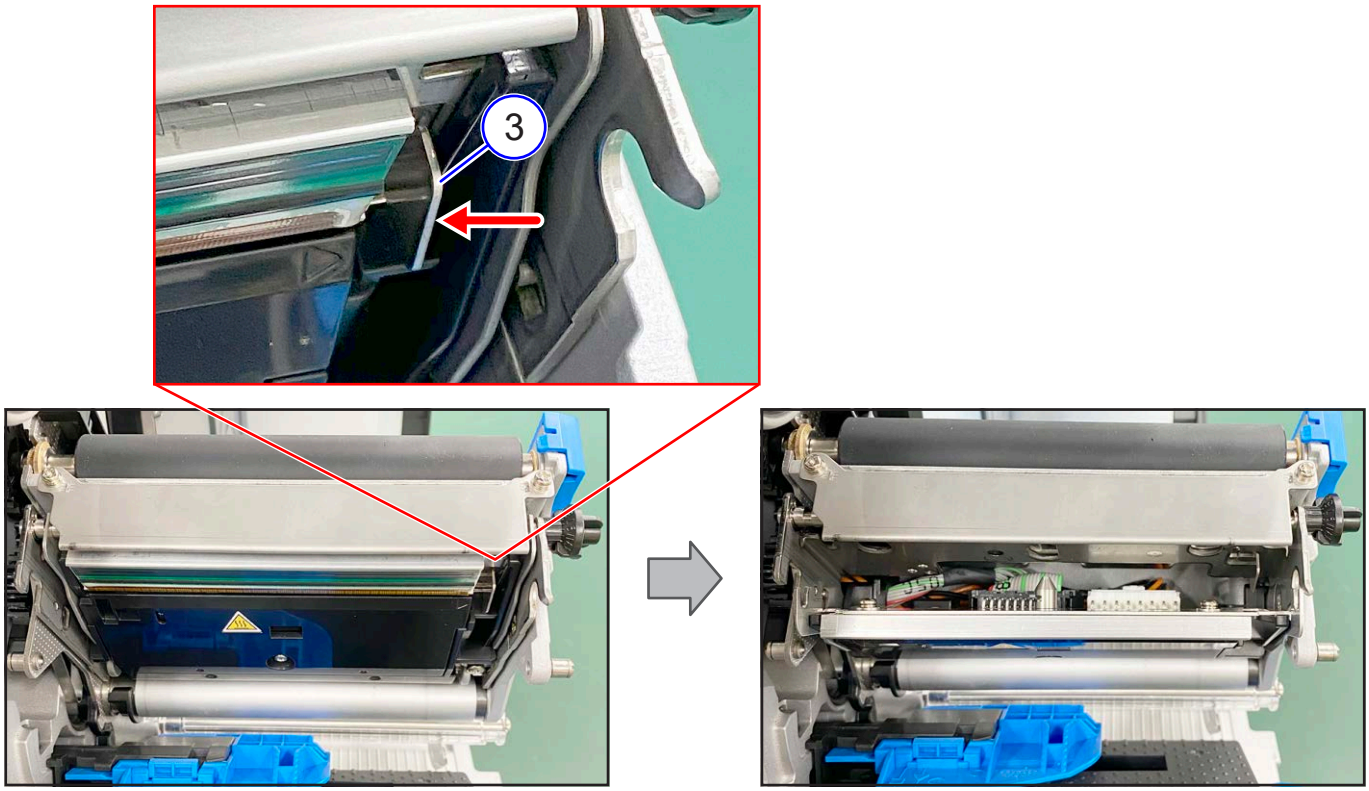

4 Remove the print head (④) and disconnect all connectors from it.

CL4-SXR

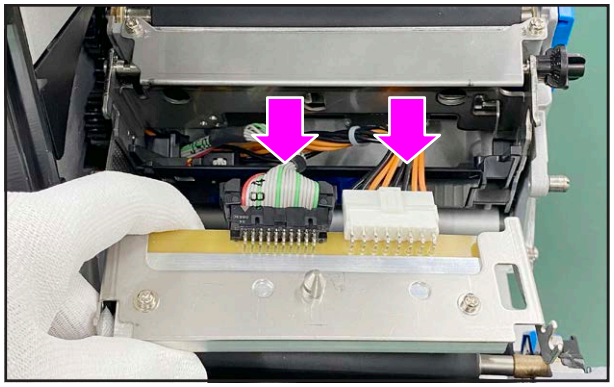

CL6-SXR

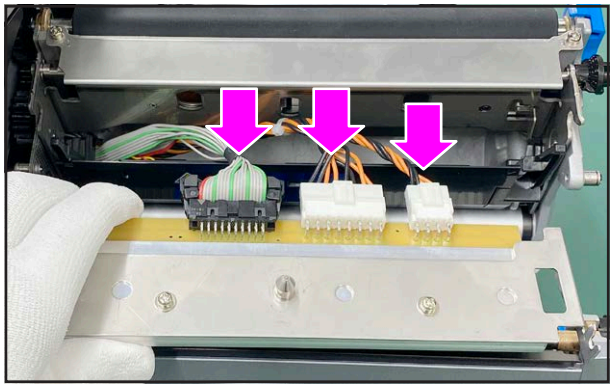

▶ From here, assembling procedure

5 Assemble the parts in the reverse order of the disassembly procedure.

Notes on assembling

Do not touch the heating element and terminals of the print head (thermal head).

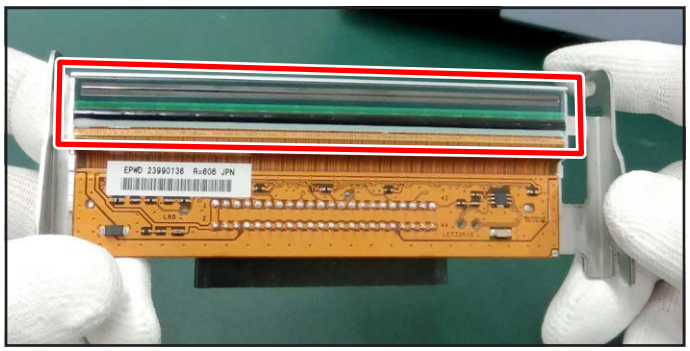

Install the print head so that it clicks and locks into place.

After installation, clean the head section with ethanol.

CAUTION

Do not use thinner, benzene-based solutions or kerosene.

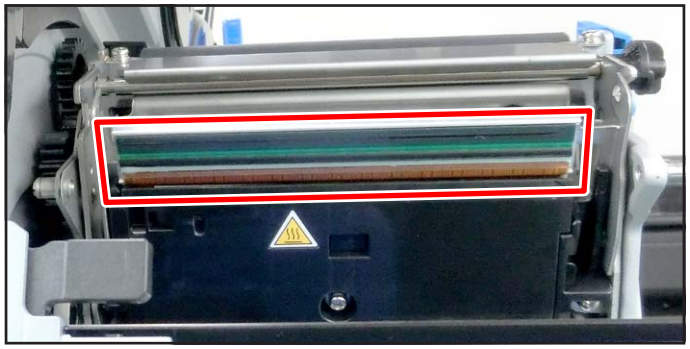

Note

Since the head counter is automatically updated, it is not necessary to clear the head counter.

4. 4 Paper Transfer Section

4.4.1 Replacing the Platen Roller

5 min.

As the platen roller constantly contacts and drive the media (labels or ribbon) during the printing, it will be worn and eventually need to be replaced to maintain the good print quality.

1 Open the OPEN COVER (①)

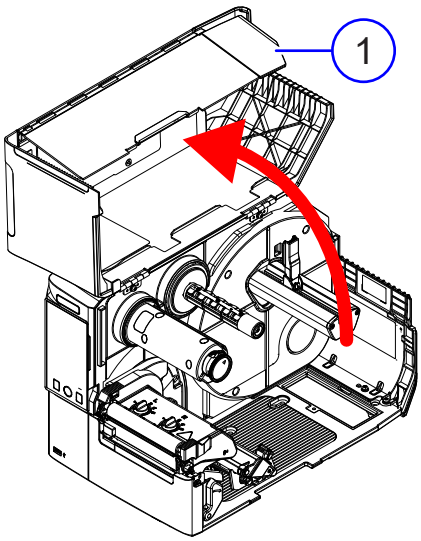

2 Push the head lock lever (②) towards the rear to unlock the print head.

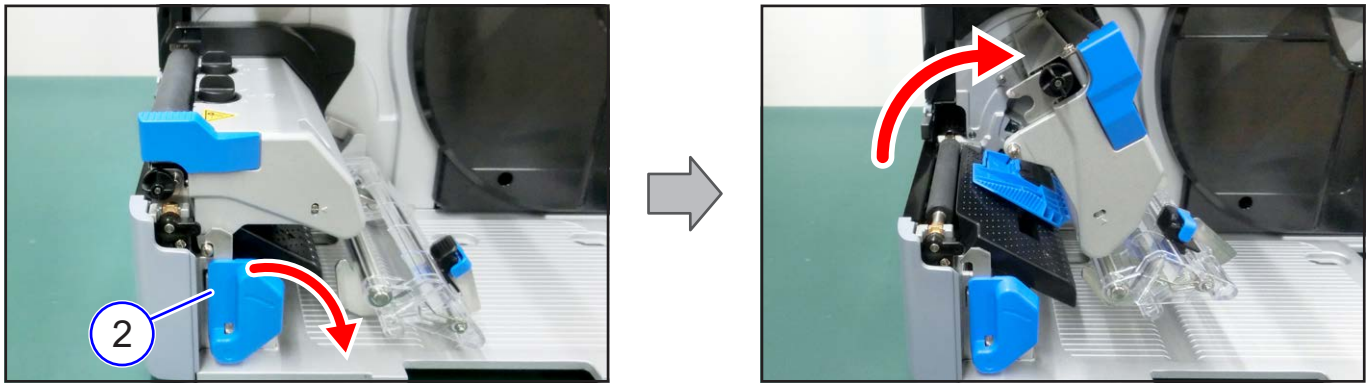

3 Turn the lever (③) to unlock the platen roller.

4 Remove the platen roller (④).

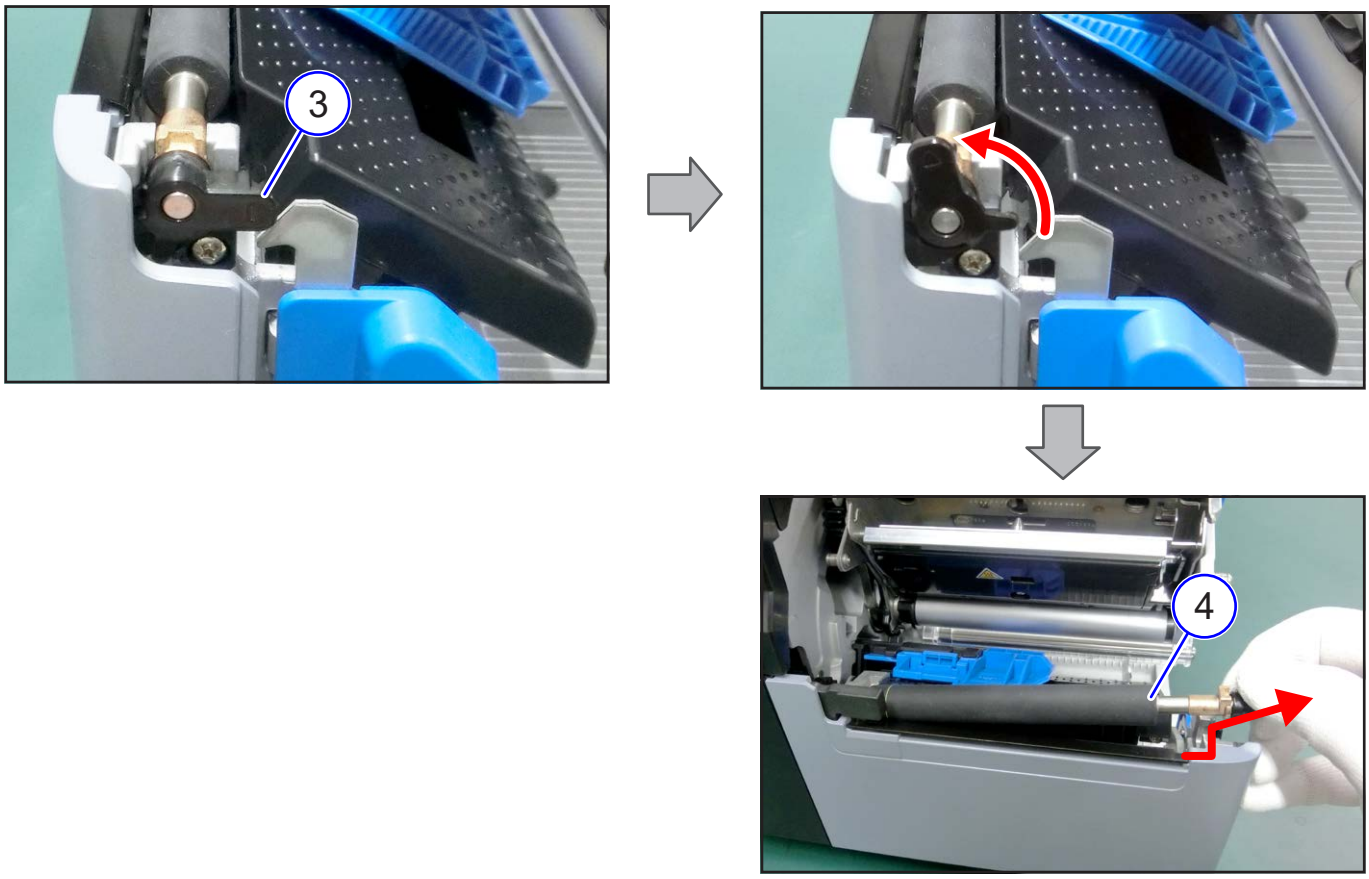

▶ From here, assembling procedure

5 Install the new platen roller.

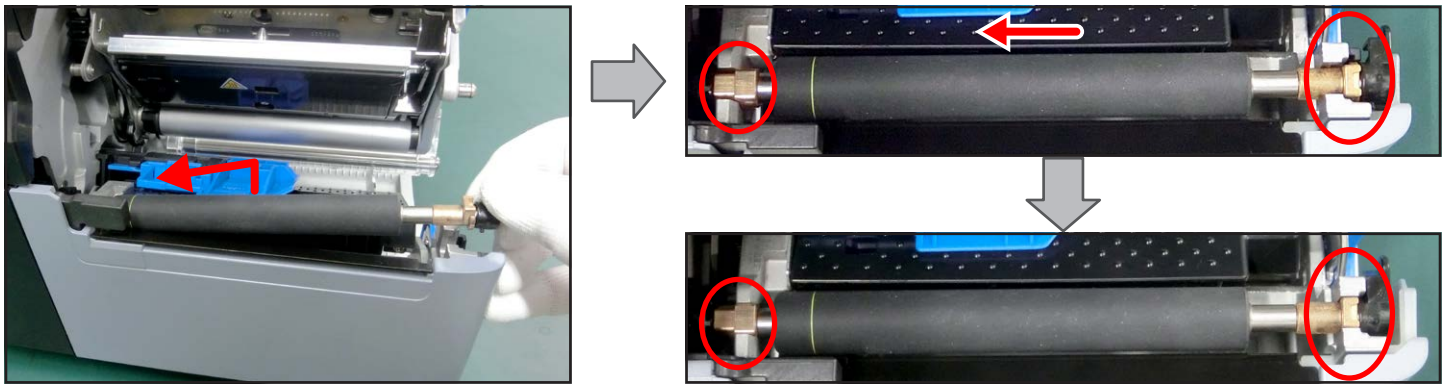

6 Assemble the parts in the reverse order from step 3.

4.4.2 Replacing the Torque Limiter for Ribbon Supply Spindle

15 min.

Required tools :

- Phillips screwdriver (#2)

The following parts can be replaced.

- Torque Limiter for Ribbon Supply Spindle
- BF SPRING

1 Unlock the connectors and disconnect the FFC (③).

Notes on assembling

• The FFC connector is automatically locked when the FFC is fully inserted.

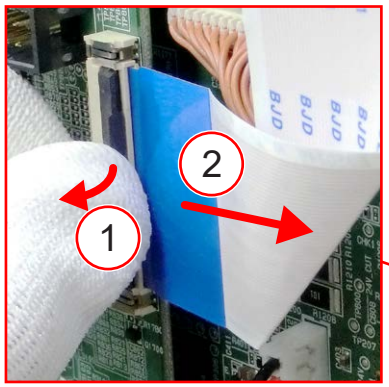

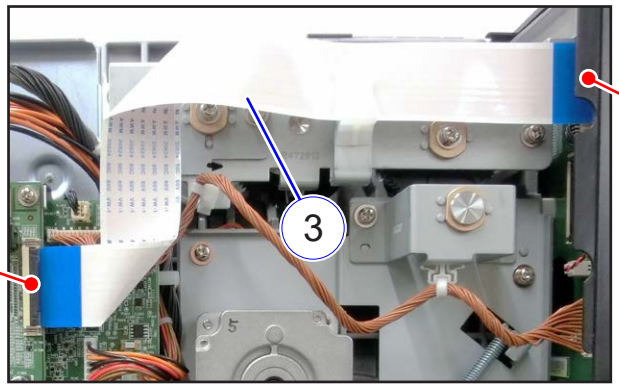

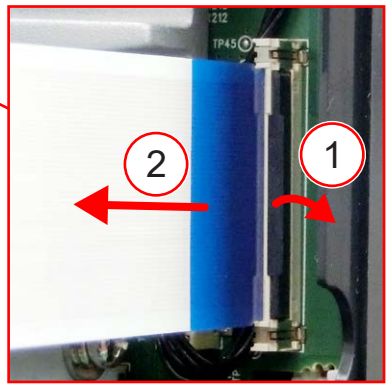

2 Remove the cable tie (④).

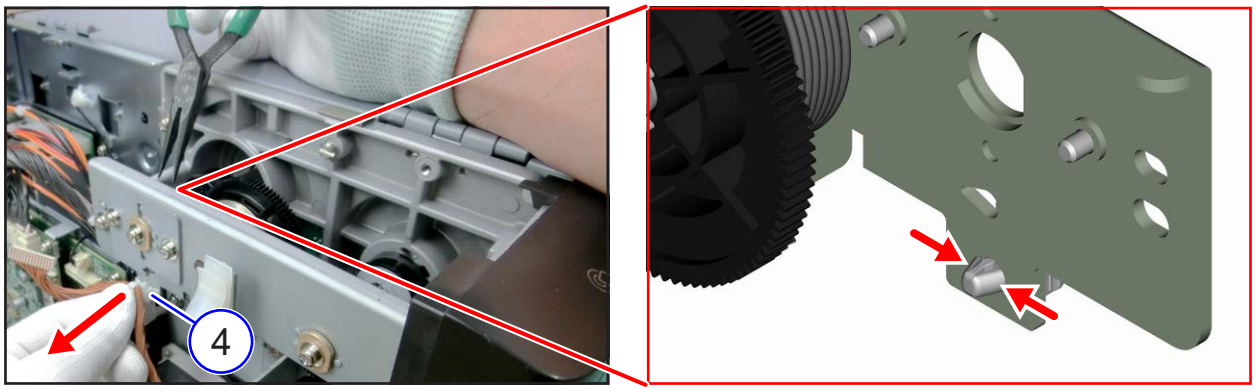

3 Hold the RIBBON UNWIND (⑤) and remove one screw (S1).

4 Hold the RIBBON REWIND (⑥) and remove one screw (S1).

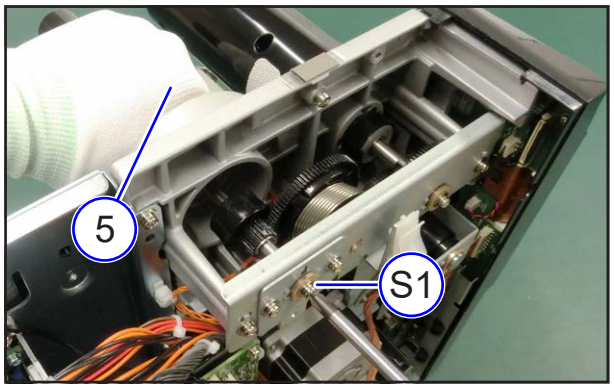

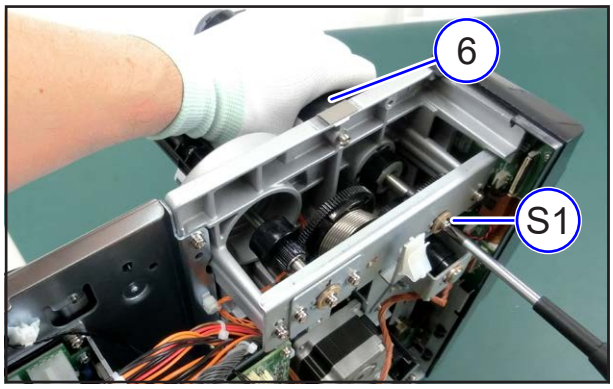

5 Remove two screws (S1) and remove the RIBBON FRAME SET(⑦).

● To replace the BF SPRING, go to step 8.

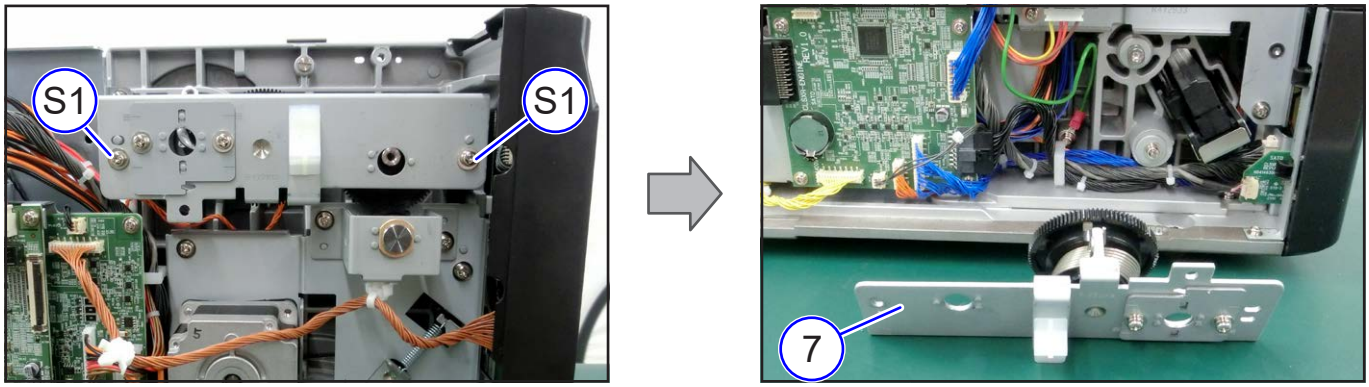

6 Remove the E RING (⑧), TQ LIMITER GEAR (⑨), and TORQUE LIMITTER(⑩).

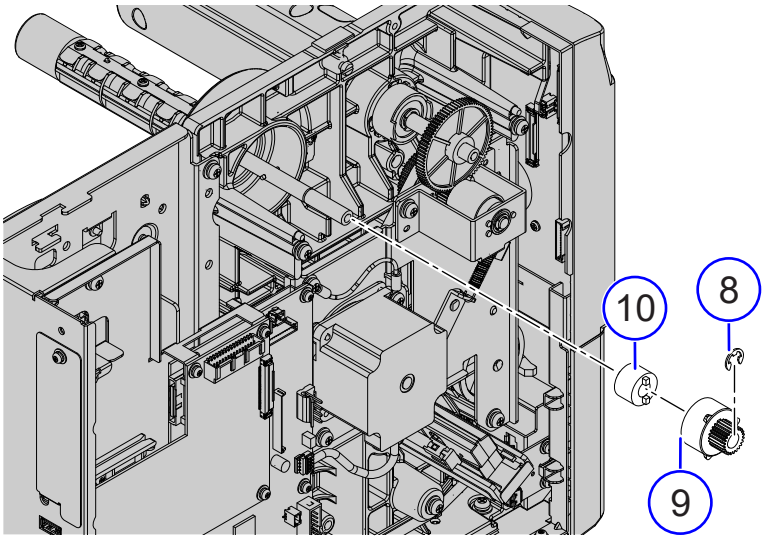

7 Remove the E RING (⑪), SP MOUNT GEAR (⑫), and BF SPRING (⑬).

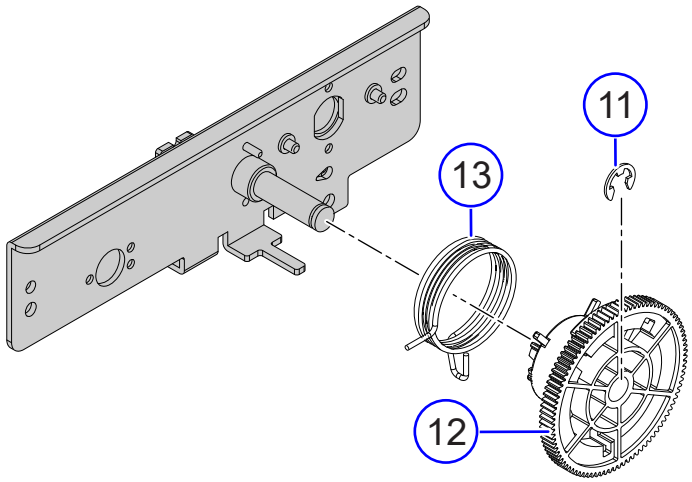

Tips on assembling

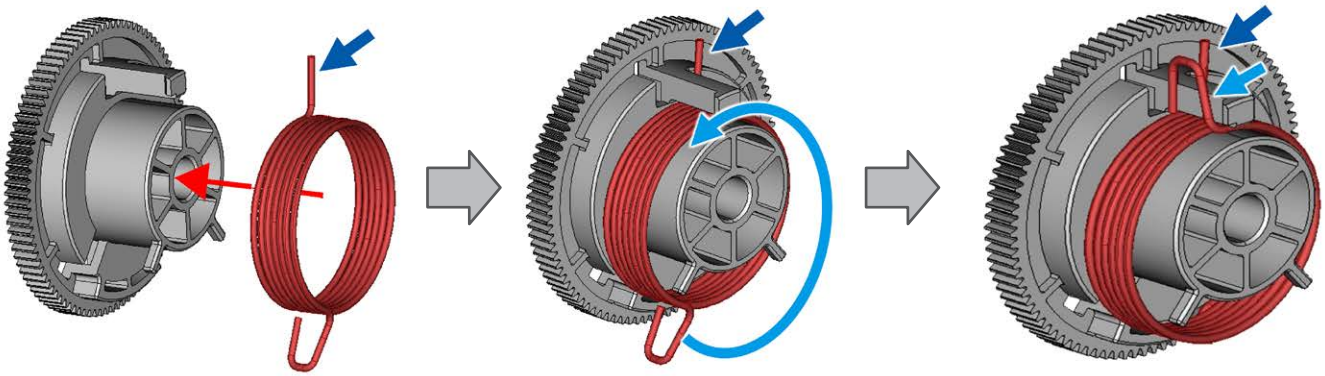

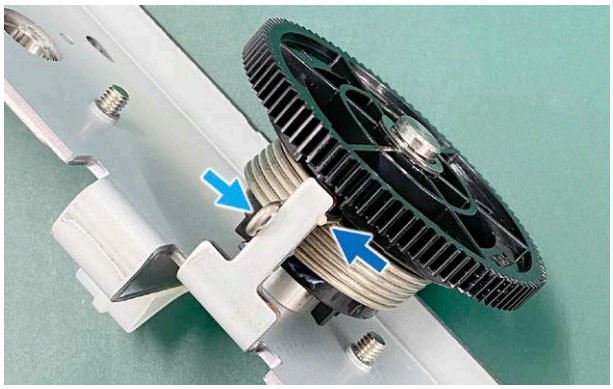

▶ From here, assembling procedure

8 Assemble the parts in the reverse order of the disassembly procedure.

4.4.3 Replacing the GEAR FRAME ASSY

15 min.

Required tools :

- Phillips screwdriver (#2)

The following parts can be replaced.

- Timing Belt
- Motor Pulley
- Torque Limiter for Ribbon Rewind Spindle

1 Remove the OPEN COVER (①) and COVER L (②).

Refer to 4.2.1 Replacing the OPEN COVER, COVER L

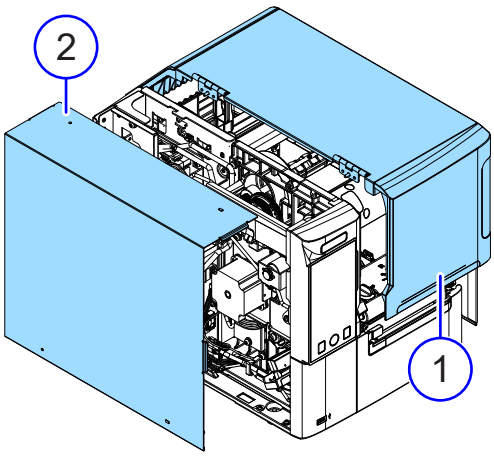

2 Unlock the connectors and disconnect the FFC (③).

Notes on assembling

• The FFC is locked when it is fully inserted.

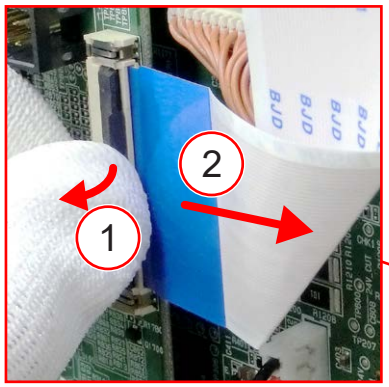

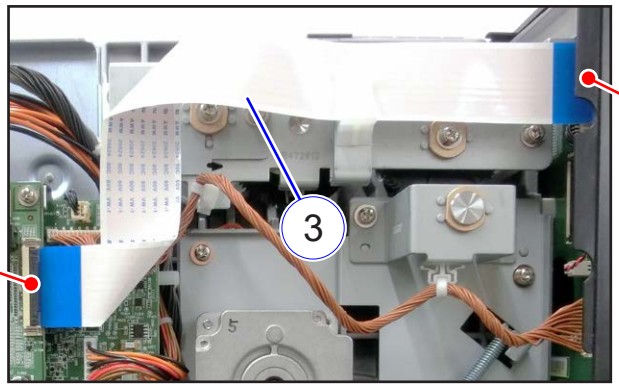

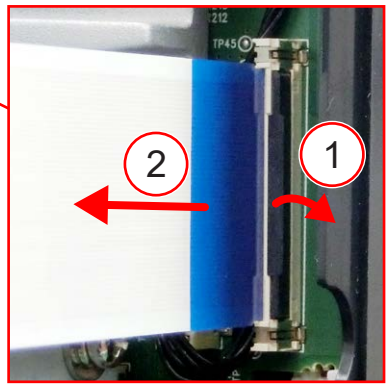

3 Disconnect two connectors (④).

4 Remove the cable tie (⑤).

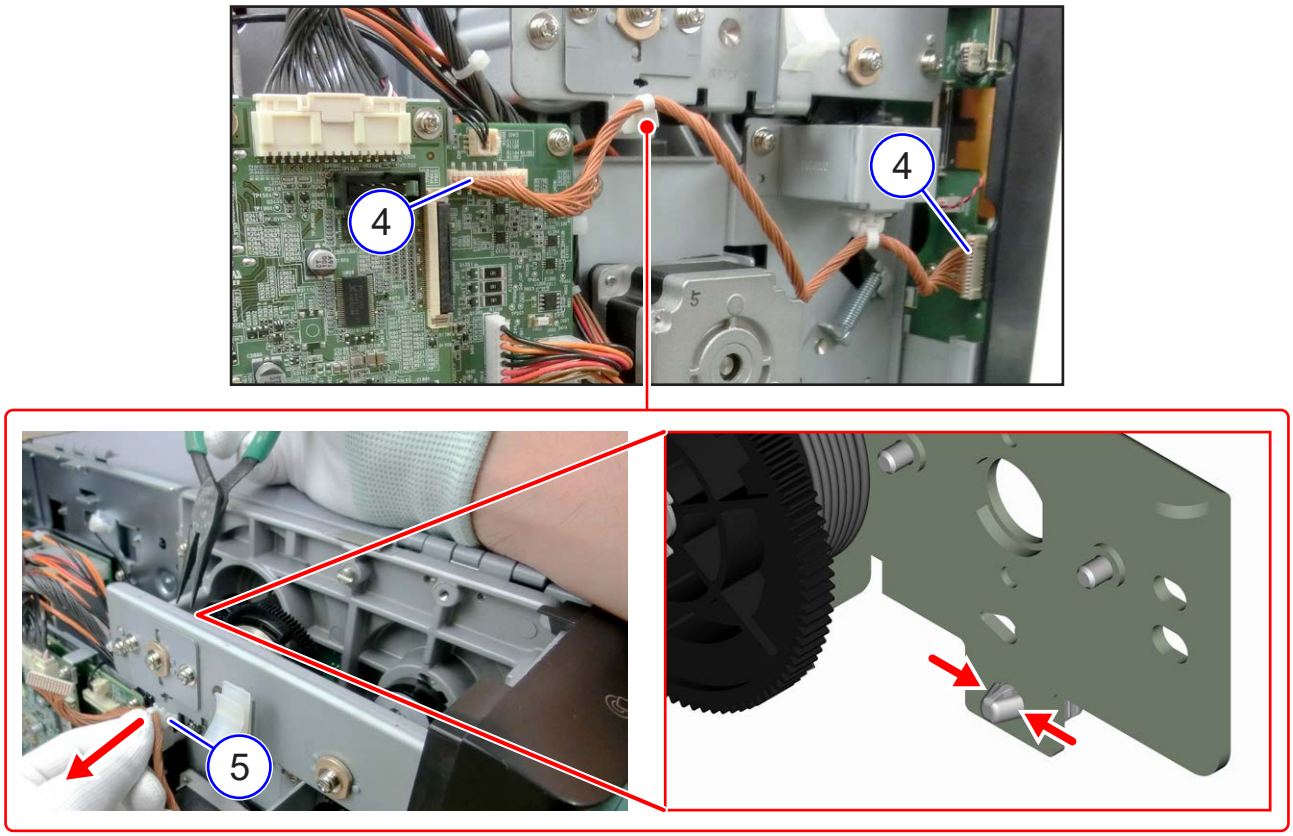

5 Disconnect one connector (⑥).

6 Remove four screws (S1) and remove the GEAR FRAME ASSY(⑦).

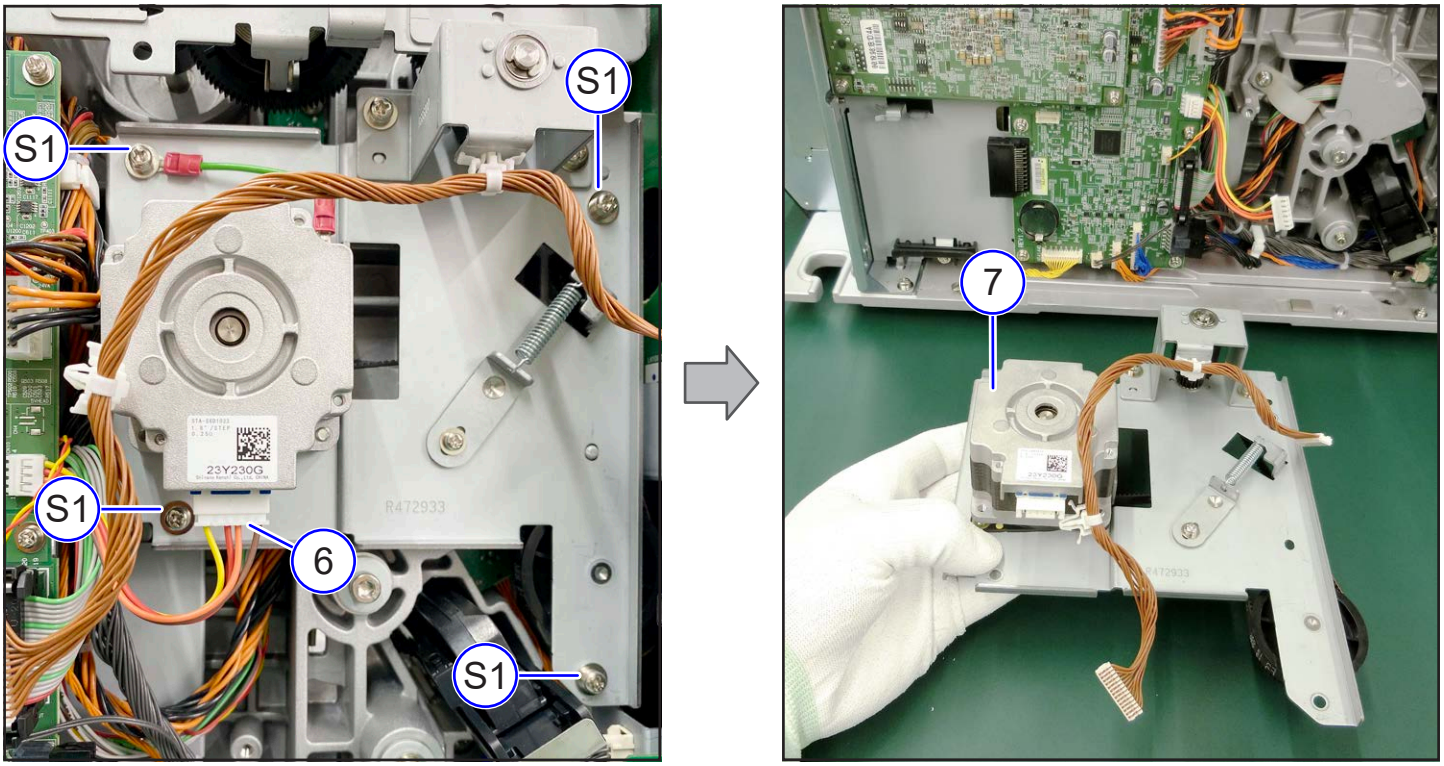

7 Remove the spring (⑧) and loosen one screw (⑨).

8 Remove the E RING (⑩) and remove the gear (⑪).

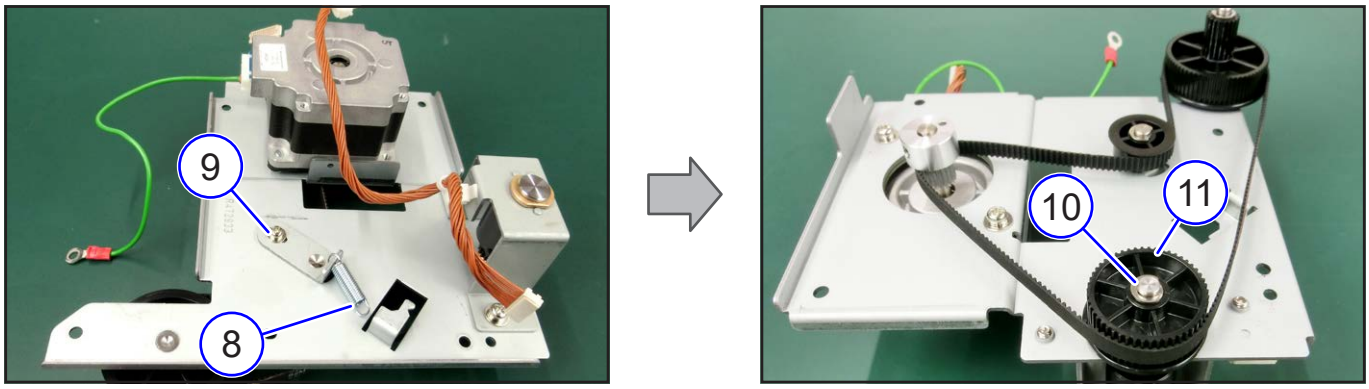

9 The following parts can be replaced.

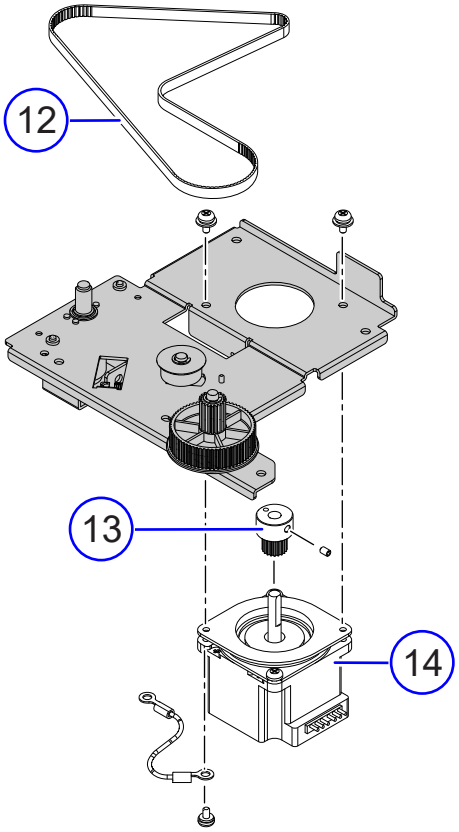

No.	Parts Name
12	TIMING BELT
13	MO PULLEY
14	STEPPING MOTOR

10 Remove the E RING(⑮).

11 Remove two screws (S15).

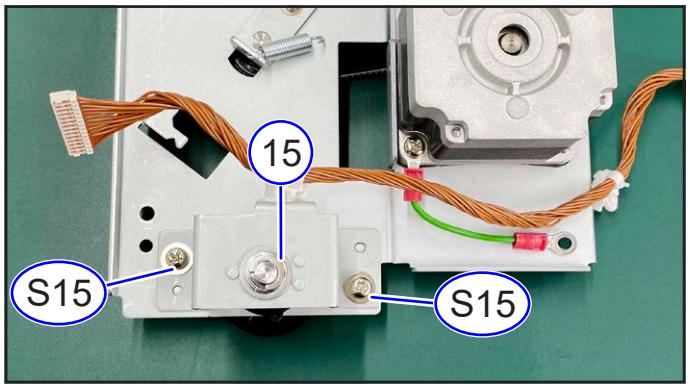

Details

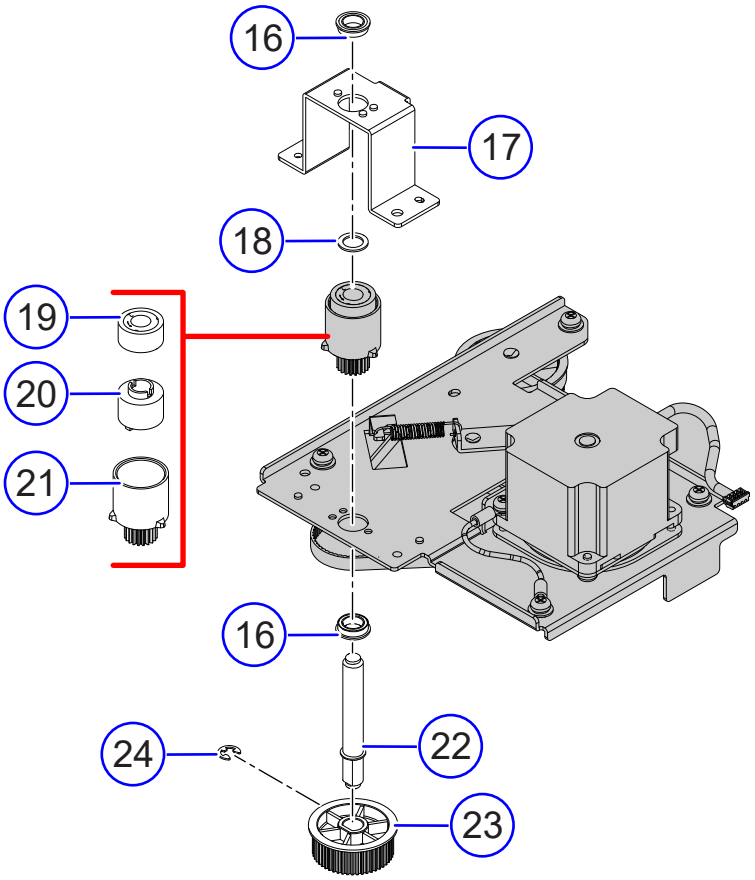

No.	Parts Name
16	BALL BEARING
17	GEAR PULLEY BR
18	POLY SLIDER WASHER
19	ONEWAY CLUTCH
20	TORQUE LIMITER
21	TQ LIMITER GEAR(0.6*20)
22	GEAR PULLEY SHAFT
23	PULLEY(51)
24	E SNAP RING

Tips on assembling

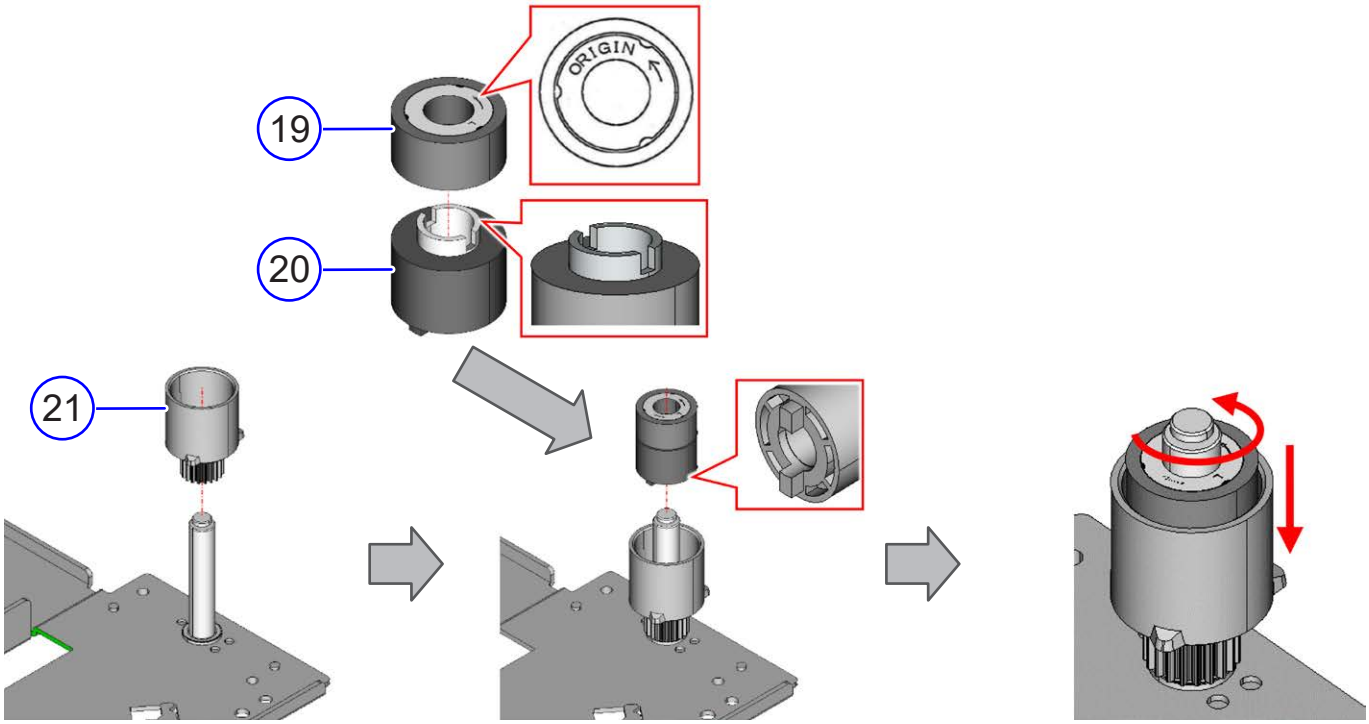

▶ From here, assembling procedure

12 Assemble the parts in the reverse order of the disassembly procedure.

4. 5 Sensor

4.5.1 Replacing the Gap Sensor

Required tools :

- Phillips screwdriver (#2)

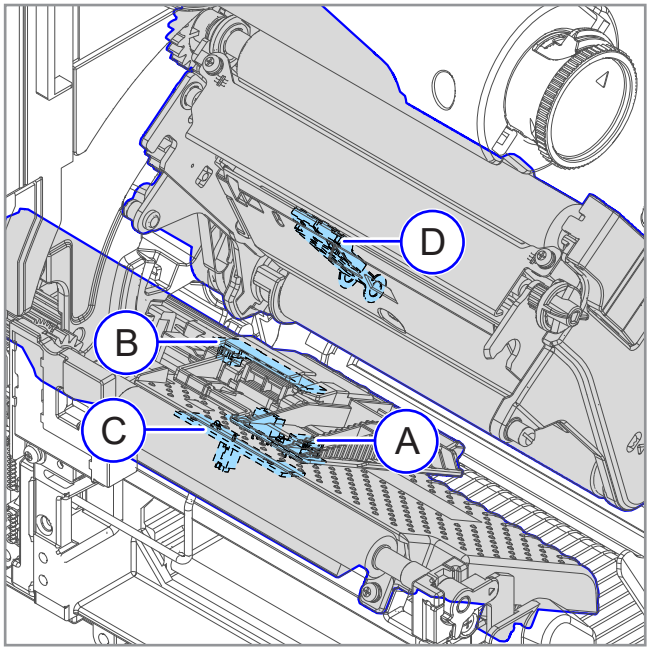

The printer has the following sensors.

CAUTION

- For RFID models, the sensor cannot be replaced separately.

A	GAP_TR_IM PCB	Steps 1 to 17		15 min.
B	GAP_D PCB			
C	GAP2_TR PCB			
D	GAP2 D ASSY	Steps 1 to 4, 18 to 21		15 min.

1 Remove the platen roller (①).

Refer to 4.4.1 Replacing the Platen Roller

2 Remove the FRONT COVER L (②) and FRONT COVER R (③) in that order.

Refer to 4.2.2 Replacing the FRONT COVER

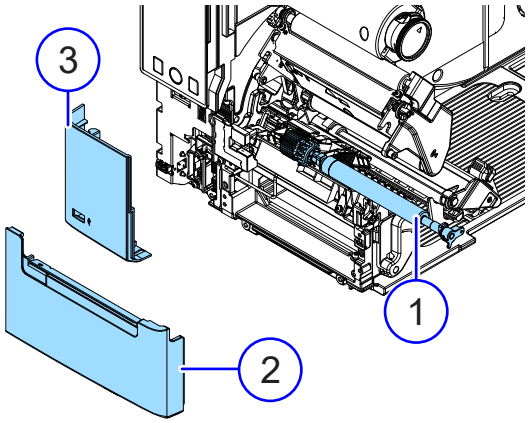

3 Move the SENSOR CASE to the right to the position shown in the right figure.

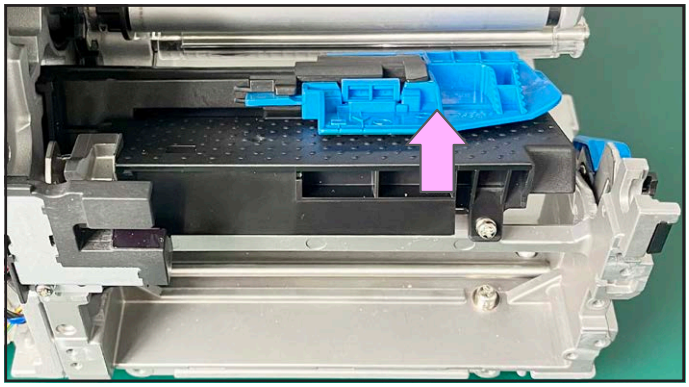

4 Disconnect the cable (④).

5 Remove two screws (S6) and remove the MEDIA GUARD ASSY (⑤).

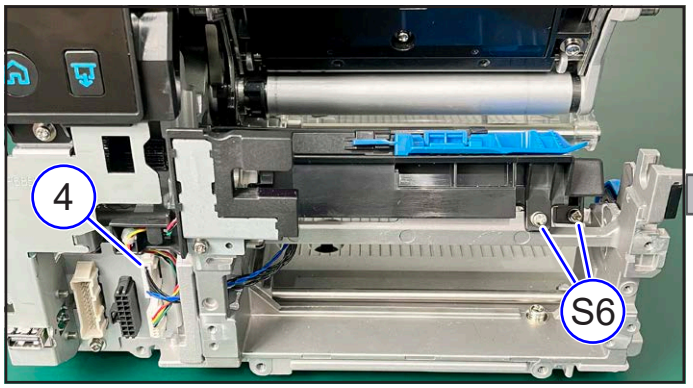

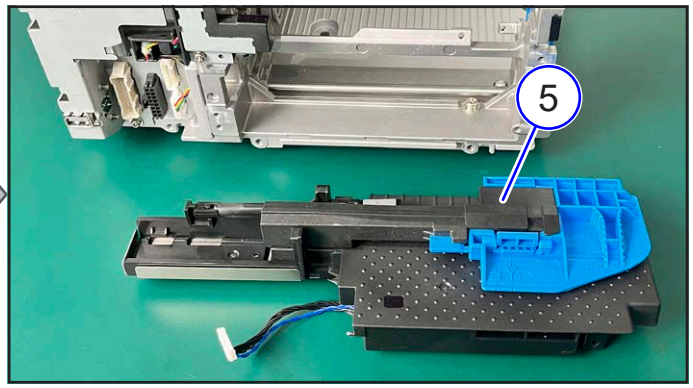

Notes on assembling

- Pass the cable through the cable hole in the frame.

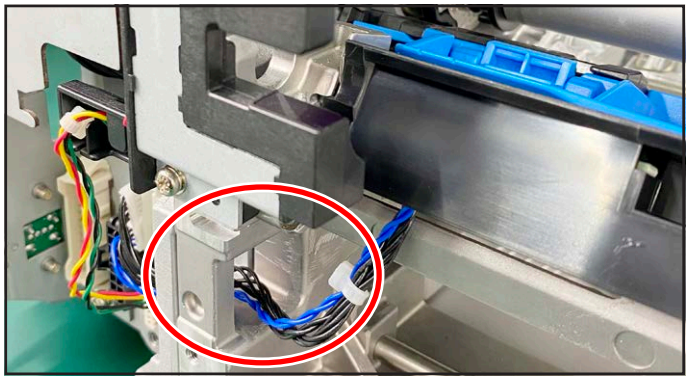

Notes on assembling

- If the SENSOR CASE is in position A in the figure below, it is difficult to assemble the MEDIA GUARD ASSY in the printer. So, move the SENSOR CASE to position B before assembling.

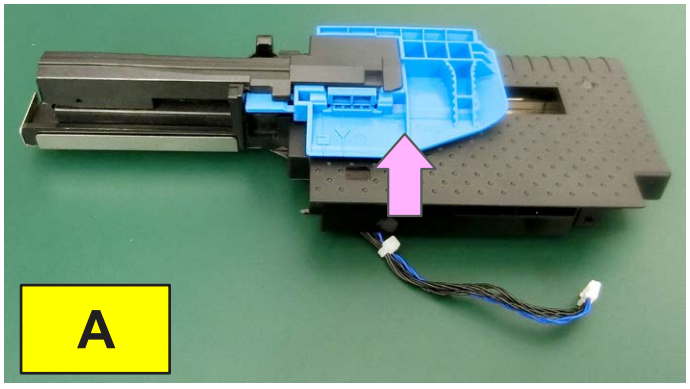

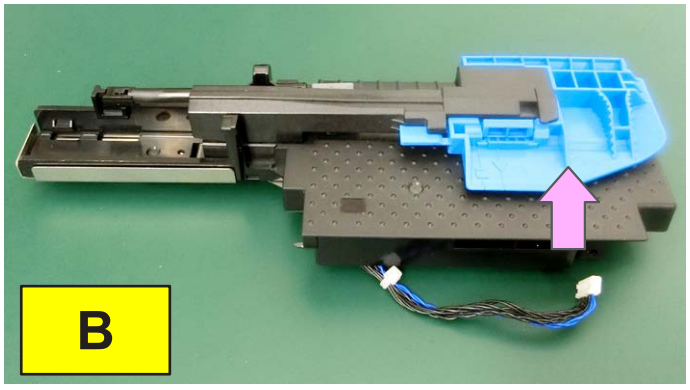

Note

• To replace the GAP2 D ASSY, go to step 17.

6 Remove three screws (S6) and remove the SENSOR CASE TENSION(⑥).

Notes on assembling

• Make sure that the positioning pins (→) are firmly inserted in place.

CL4-SXR

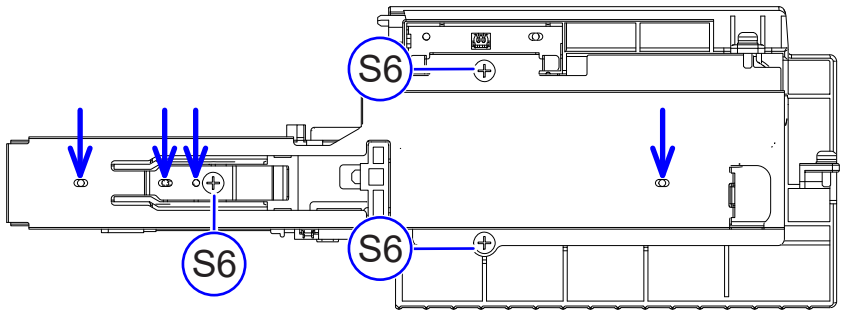

CL6-SXR

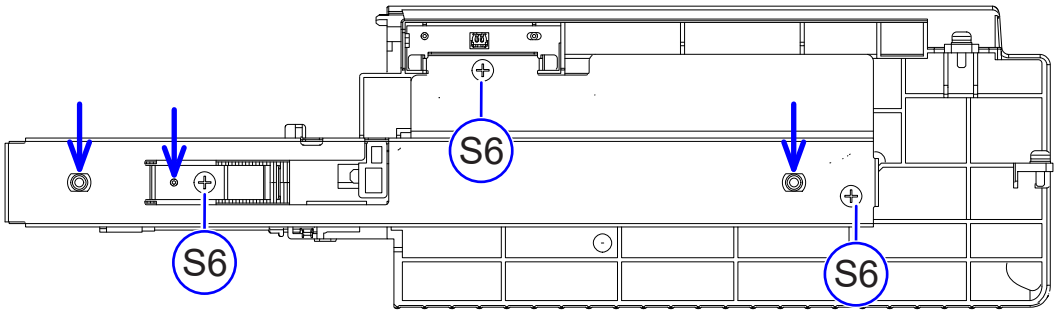

CL4-SXR

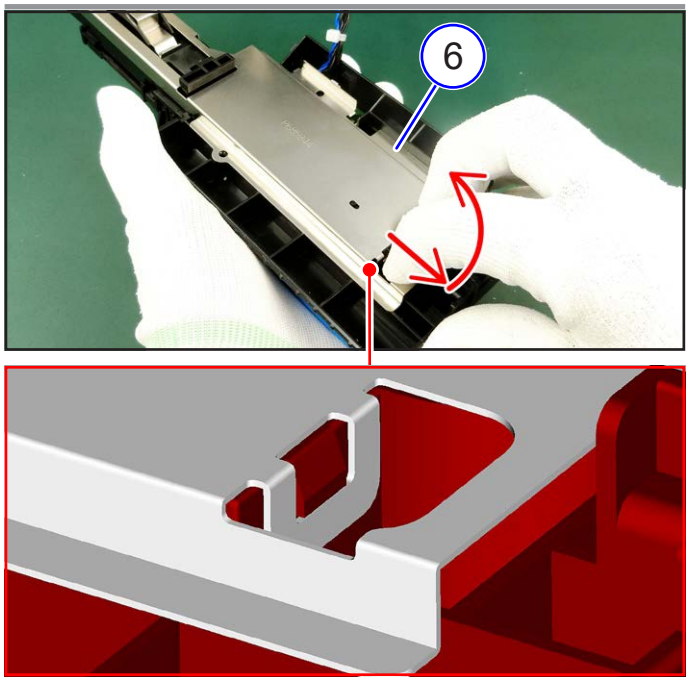

CL6-SXR

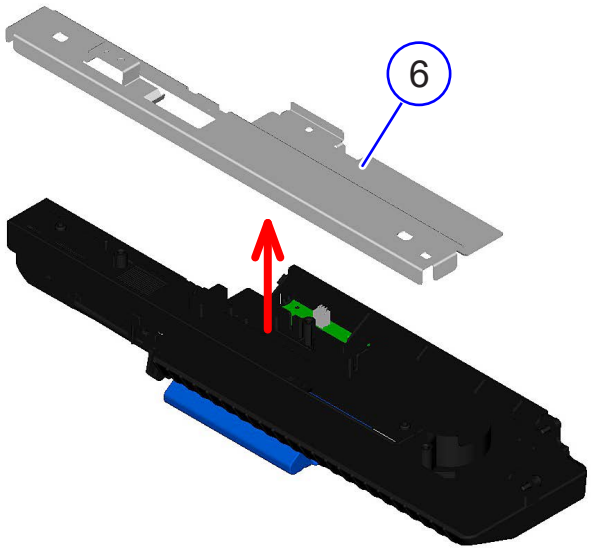

Notes on assembling

- Pass the wiring through the ribs of the case.
- Pay attention to the position of the cable tie.

CL4-SXR

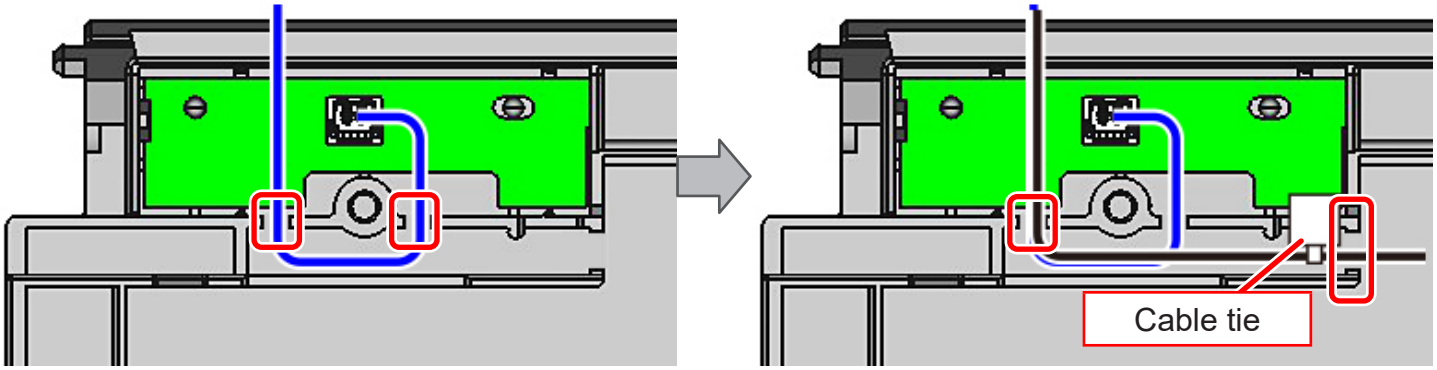

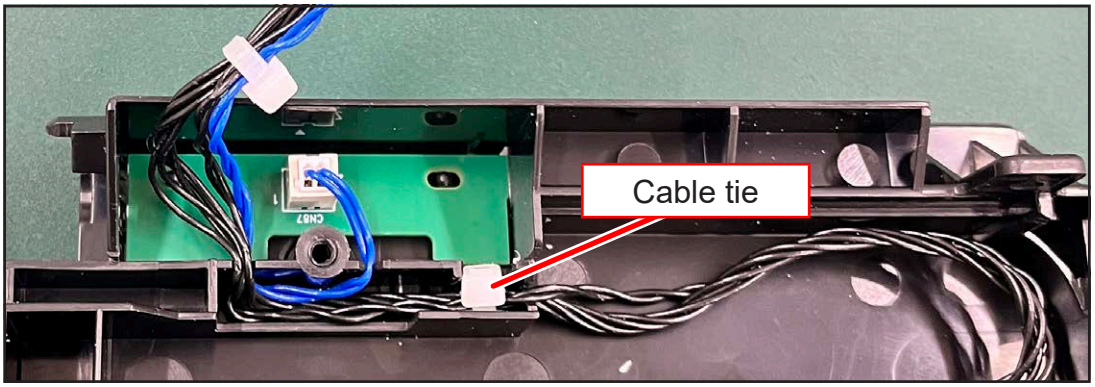

CL6-SXR

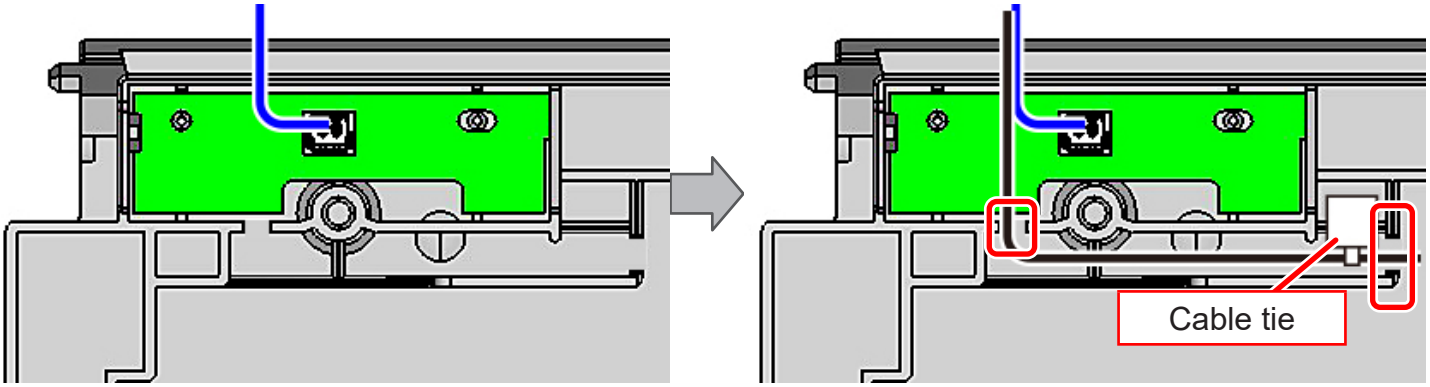

● GAP2_TR PCB

7 Disconnect the connector (⑦) and remove the GAP2_TR PCB(⑧).

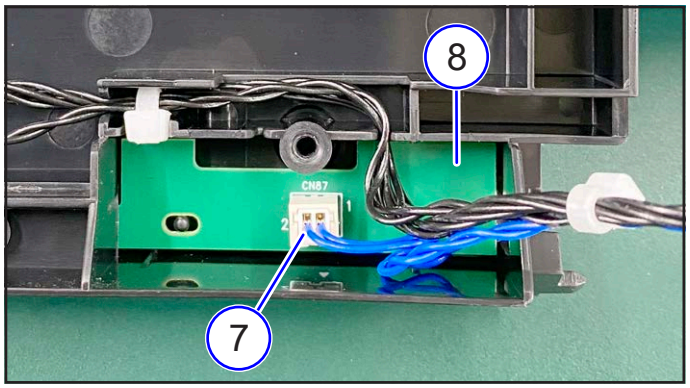

Notes on assembling

• Make sure that the PCB is fixed with a hook.

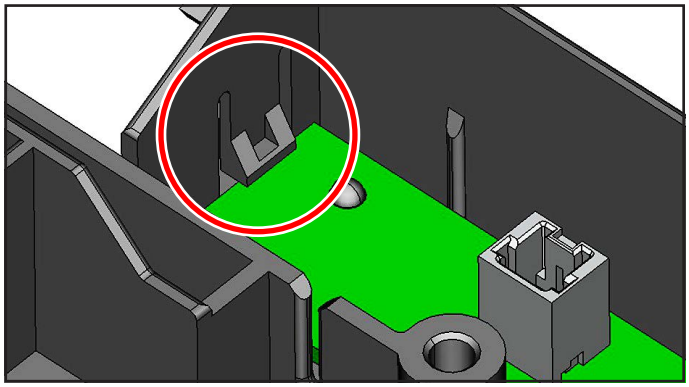

8 Lower the LABEL GUIDE LEVER (⑨) and remove the LABEL GUIDE (⑩).

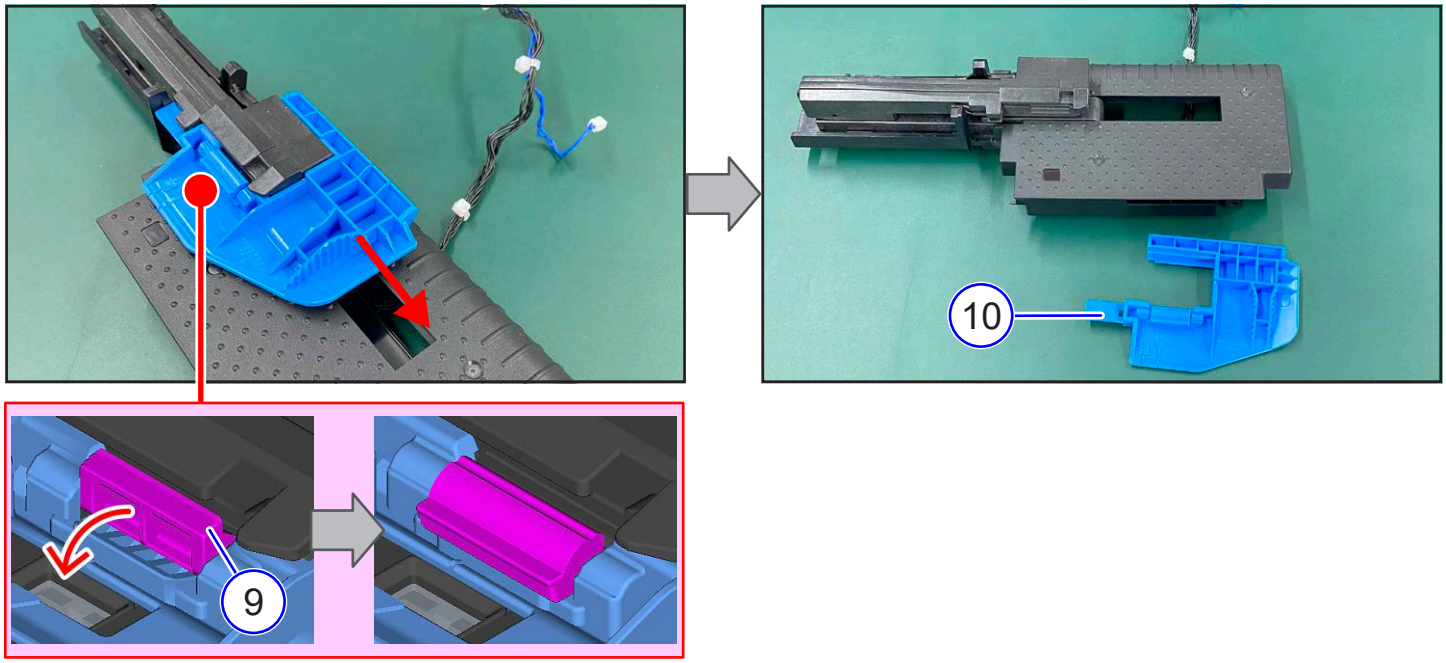

9 Raise the upper part of the SENSOR CASE (⑪) and remove it.

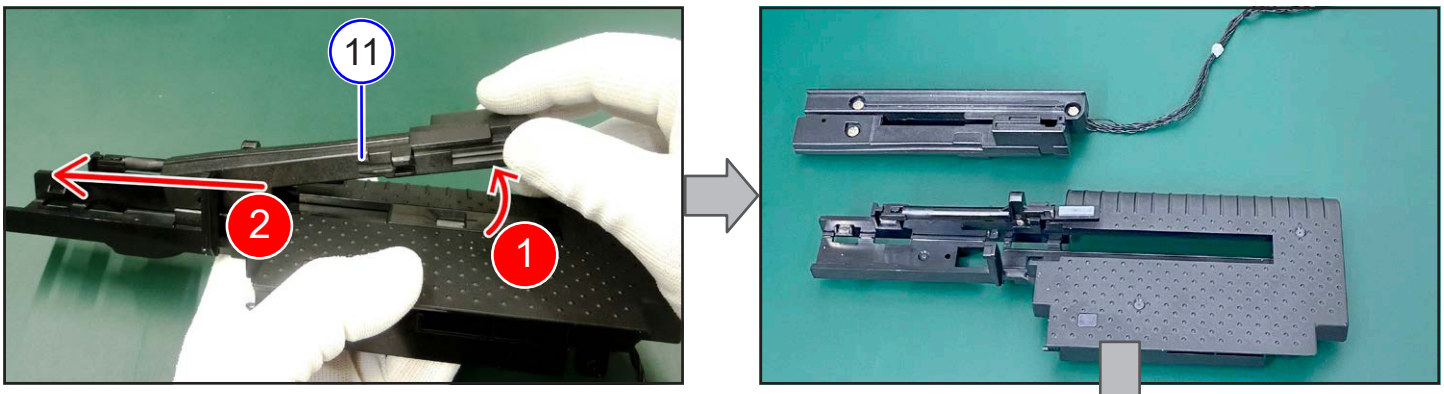

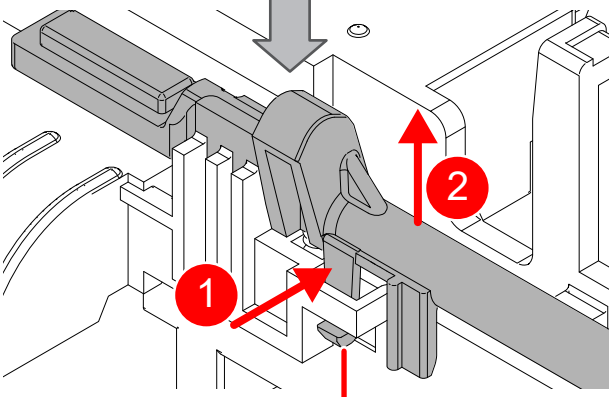

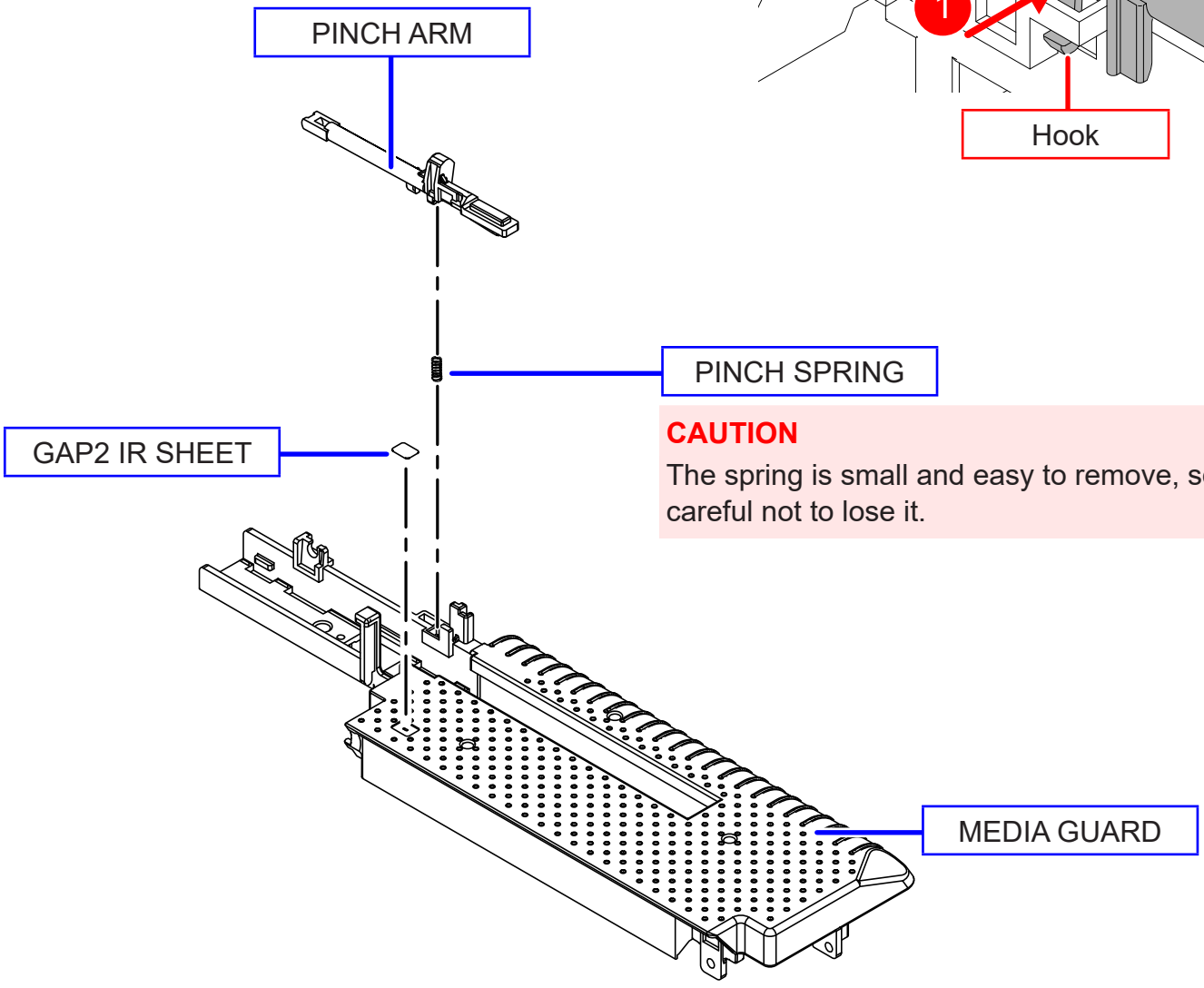

CAUTION

The spring is small and easy to remove, so be careful not to lose it.

Tips on assembling

① Pass the cable through the slit shown with the red frame.

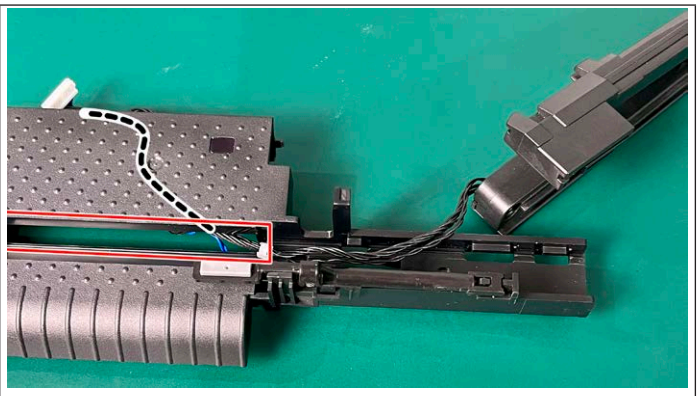

② While opening the SENSOR CASE, assemble it.

CAUTION

- Be careful not to pinch the cable.

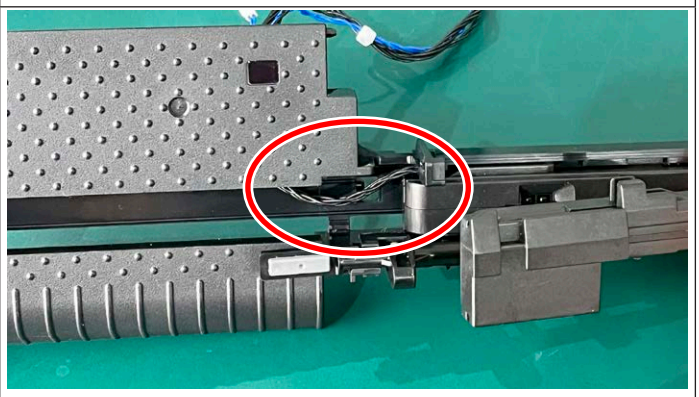

③ While pulling the cable, insert the SENSOR CASE all the way in.

CAUTION

- Be careful not to pinch the cable.

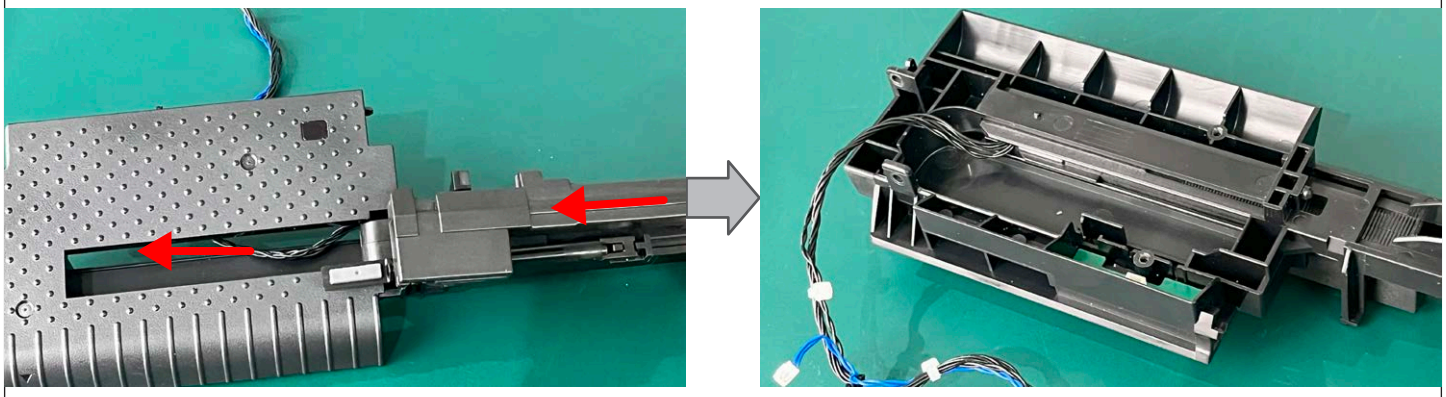

10 Remove four screws (S3) and remove the SENSOR CASE TOP B(⑫).

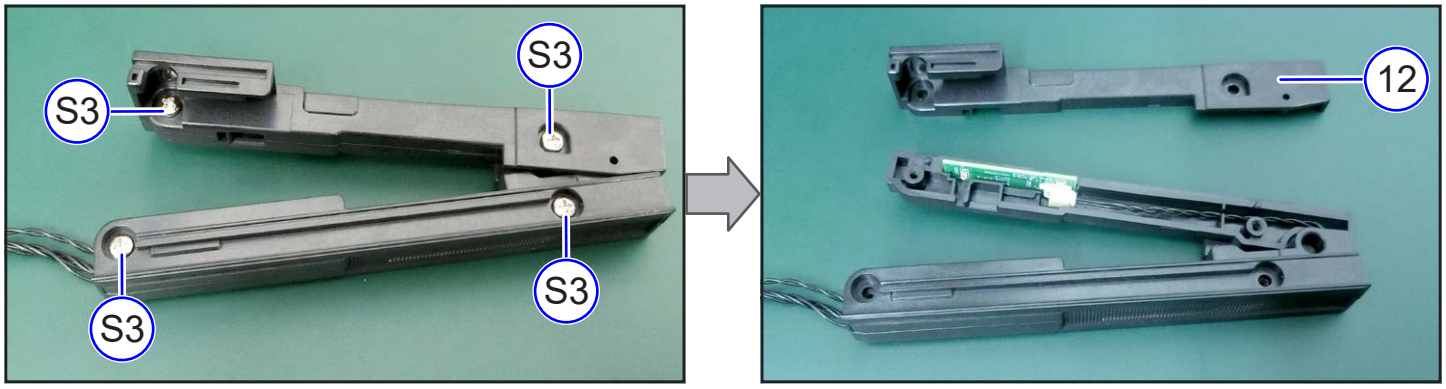

● GAP_D PCB

11 Remove the GAP_D PCB (⑭) from the SENSOR CASE TOP A (⑬).

12 Disconnect the connector (⑮).

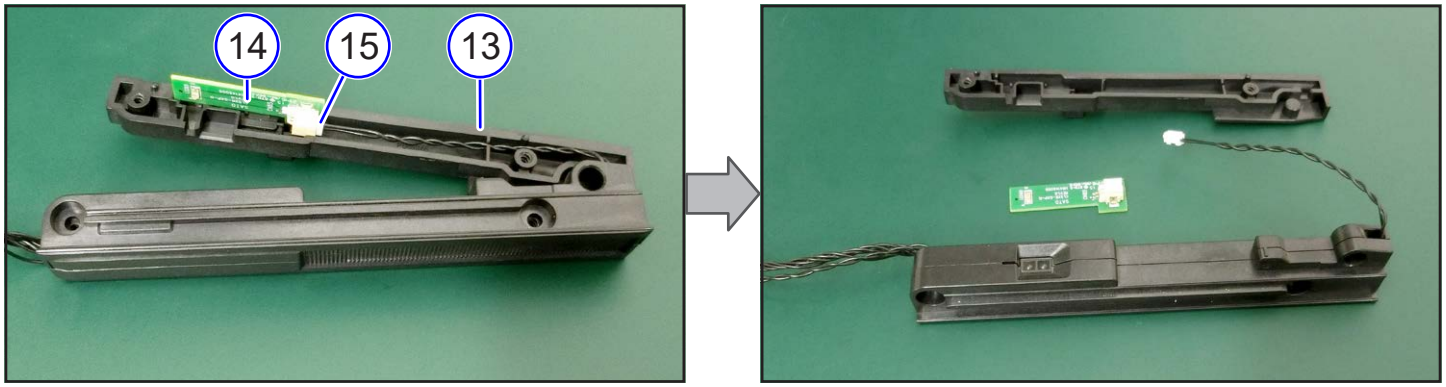

13 Separate the SENSOR CASE UNDER A (⑯) and SENSOR CASE UNDER B (⑰).

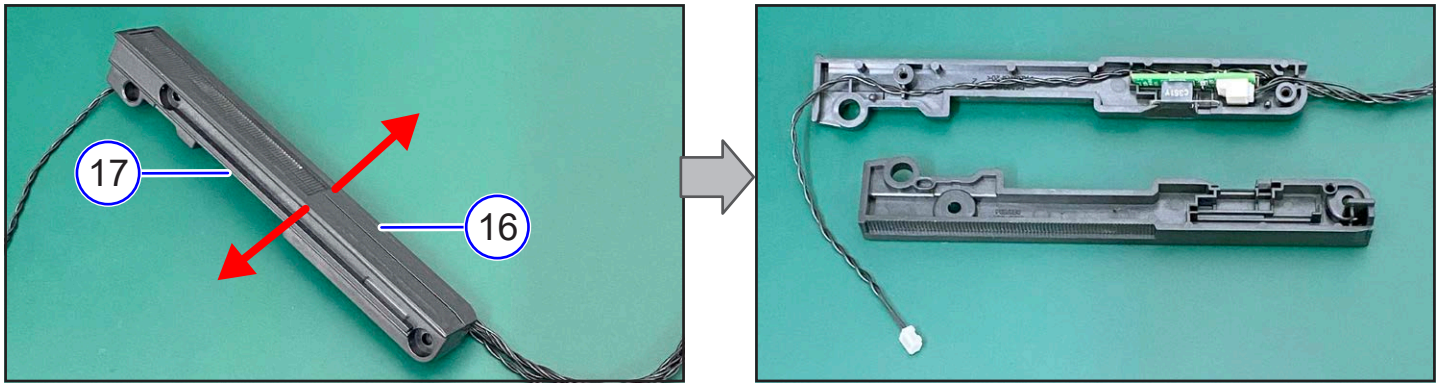

● GAP_TR_IM PCB

14 Remove the GAP_TR_IM PCB (⑱) from the SENSOR CASE UNDER A (⑯).

15 Disconnect the connector (⑲).

16 SENSOR SHEET(⑳)

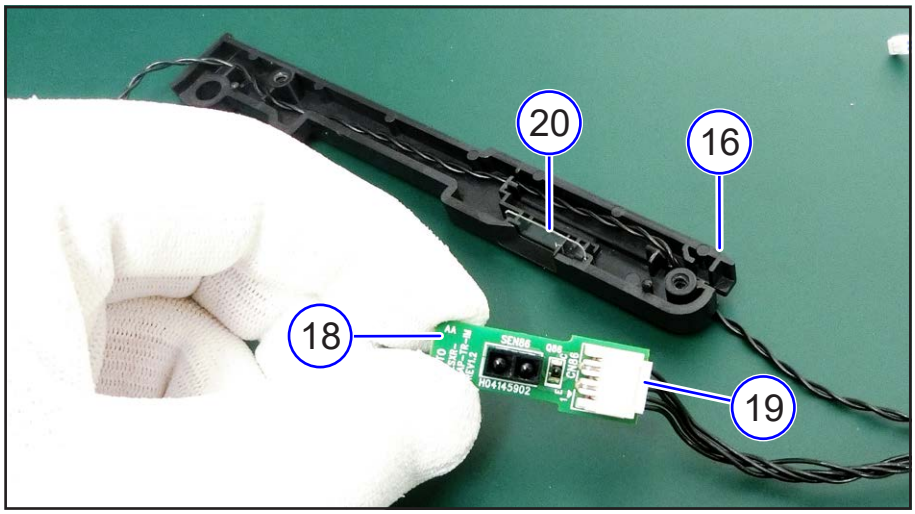

▶ From here, assembling procedure

17 Assemble the parts in the reverse order of the disassembly procedure.

Notes on assembling

• Wiring information

CL4-SXR

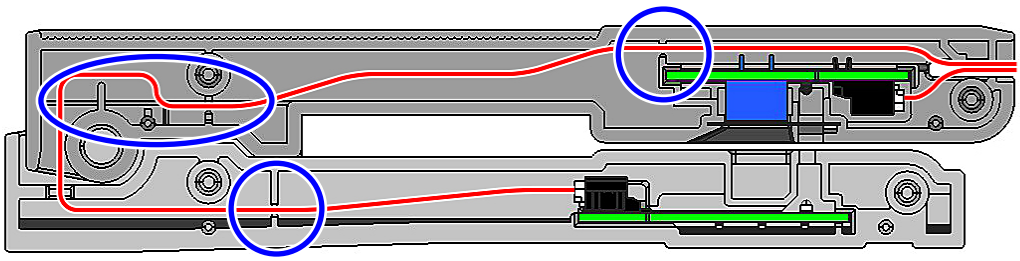

CL6-SXR

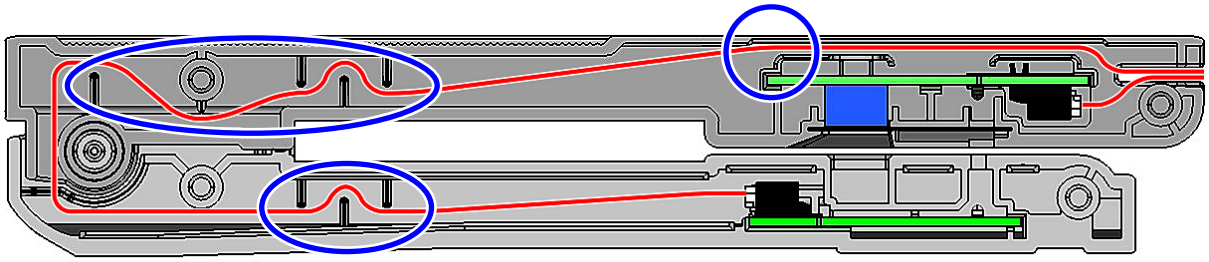

● GAP2 D ASSY

18 Remove one screw (S2) and remove the HEAD COVER(㉑).

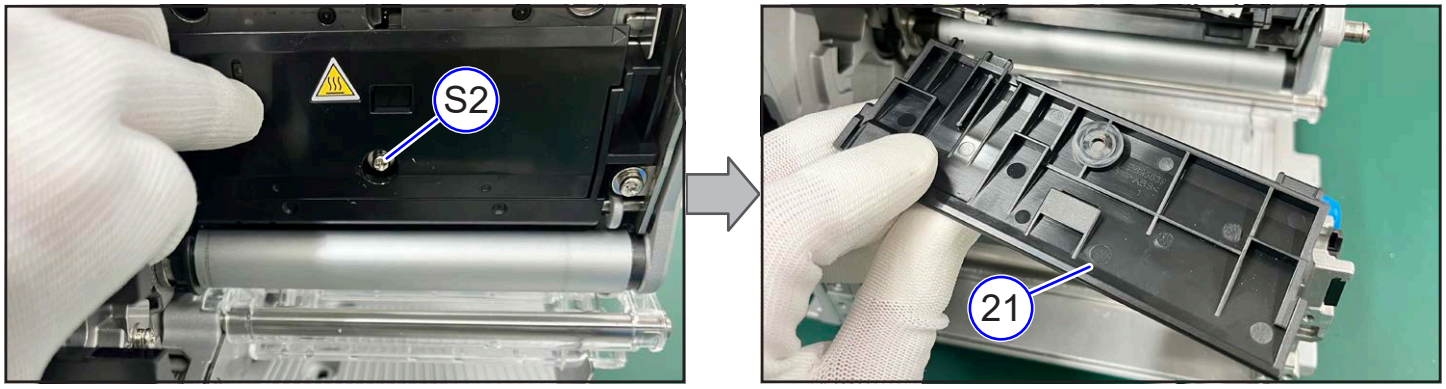

19 Disconnect the connector (㉒) and remove the GAP2 D ASSY(㉓).

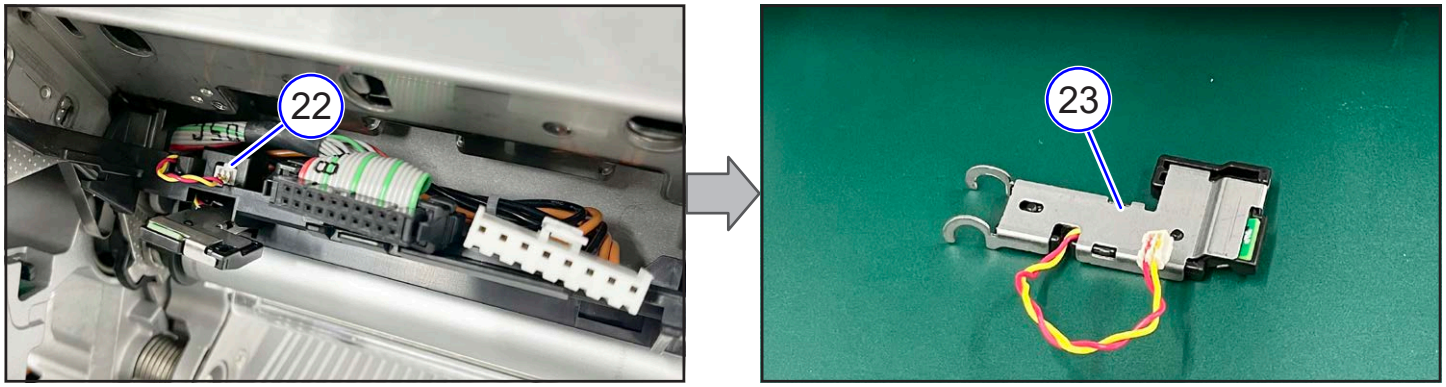

▶ From here, assembling procedure

20 Pass the cable through the cable hole (㉔) and connect the connector (㉕).

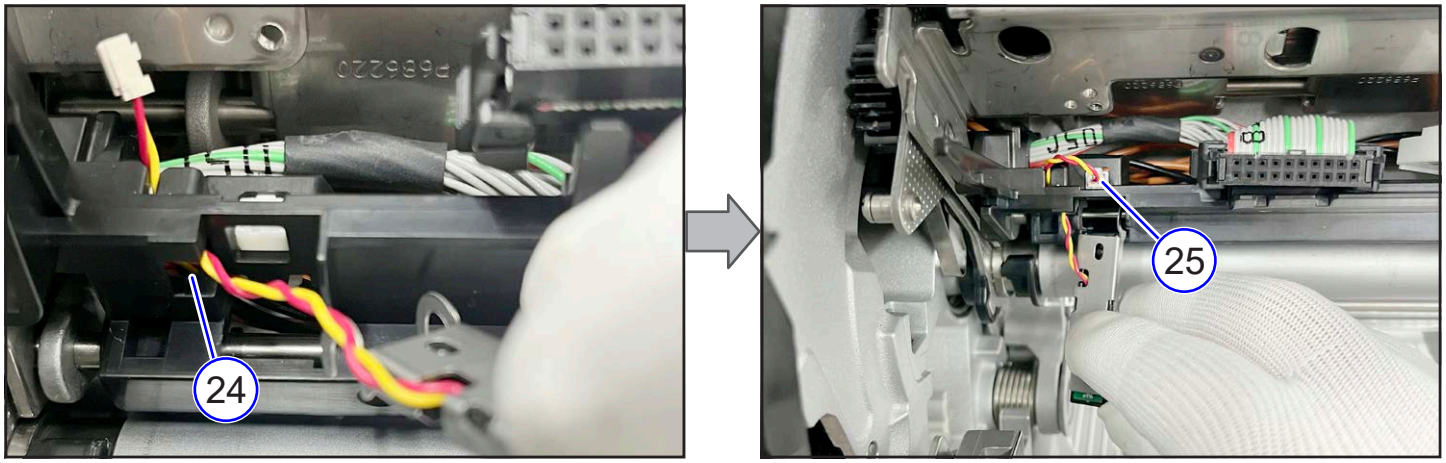

21 Assemble the HEAD COVER (㉖) and fix it with one screw (S2).

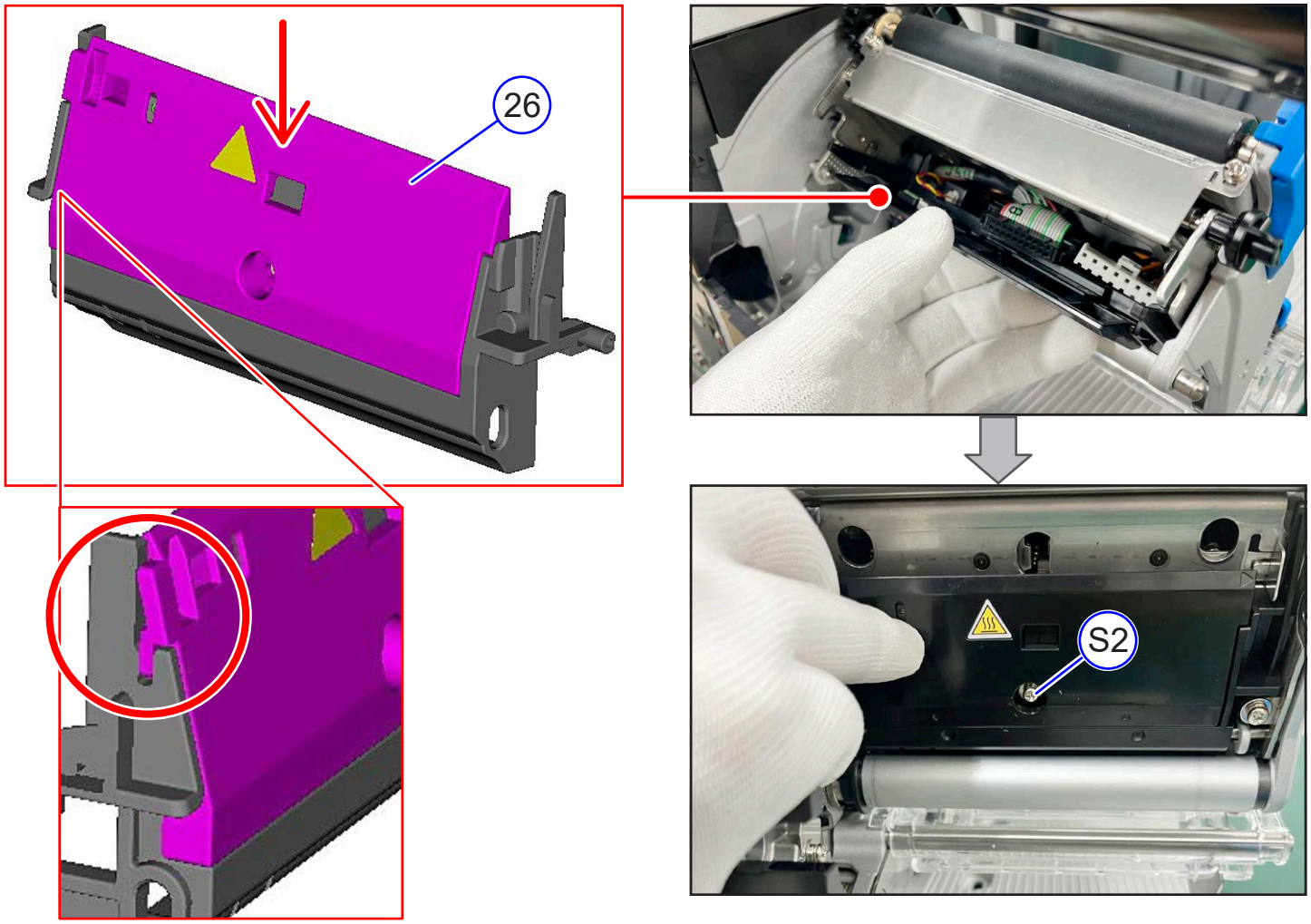

22 Assemble the parts in the reverse order from step 4.

4.5.2 Replacing the Top Sensor

10 min.

Required tools :

- Phillips screwdriver (#2)

1 Remove the FRONT COVER L (①) and FRONT COVER R (②) in that order.

Refer to 4.2.2 Replacing the FRONT COVER

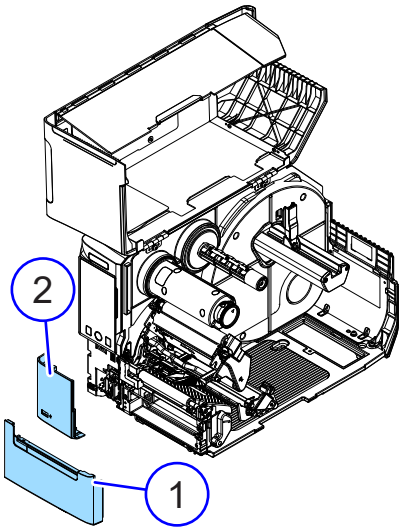

2 Disconnect the cable (③).

3 Remove one screw (S2) and remove the TOP SENSOR CASE SUB (④).

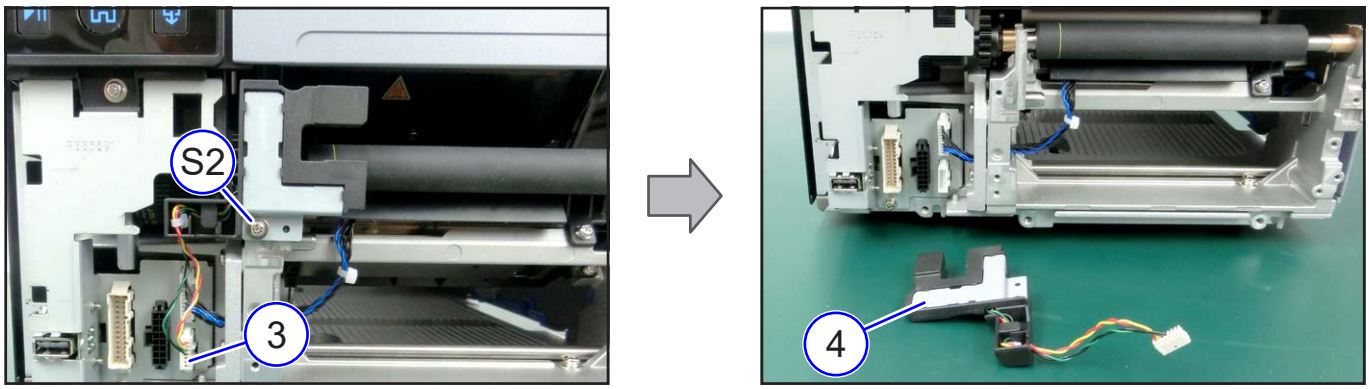

▶ From here, assembling procedure

4 Assemble the parts in the reverse order of the disassembly procedure.

4.5.3 Replacing the Ribbon Sensor

10 min.

Required tools :

- Phillips screwdriver (#2)

1 Remove the RIBBON FRAME SET (①).

Refer to 4.4.2 Replacing the Torque Limiter for Ribbon Supply Spindle

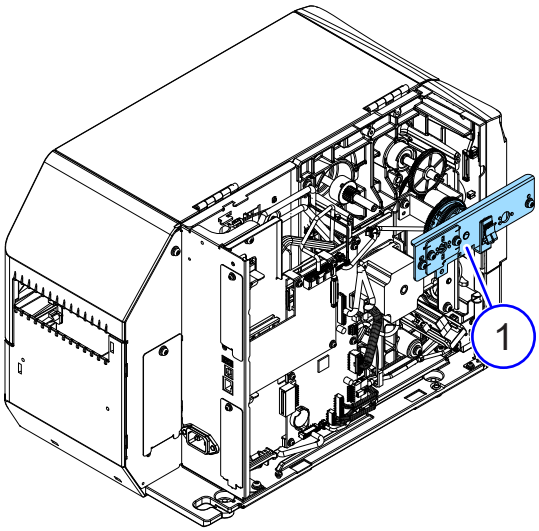

2 Remove one screw (S2) and remove the Ribbon Sensor (②).

3 Disconnect one connector (③).

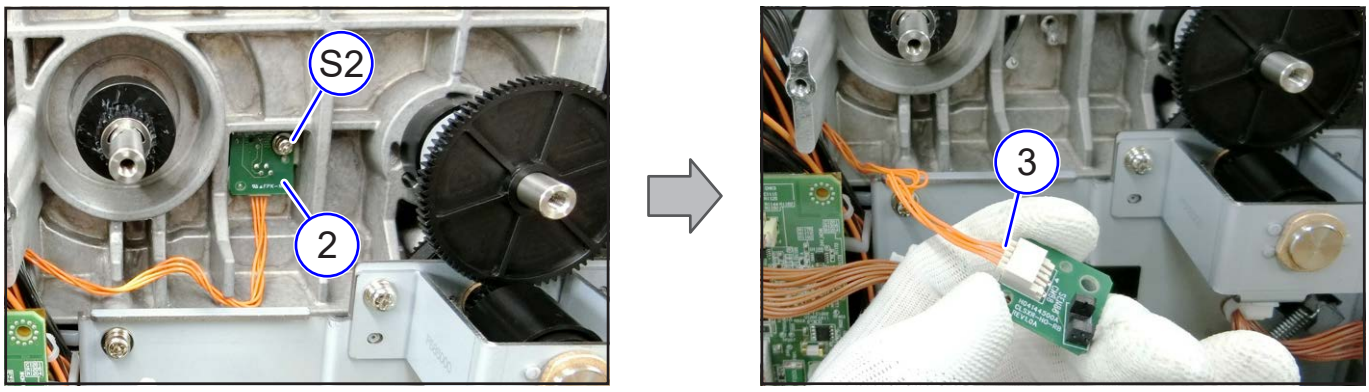

▶ From here, assembling procedure

4 Assemble the parts in the reverse order of the disassembly procedure.

4.5.4 Replacing the Label Near End Sensor

15 min.

Required tools :

- Phillips screwdriver (#2)

1 Open the OPEN COVER (①)

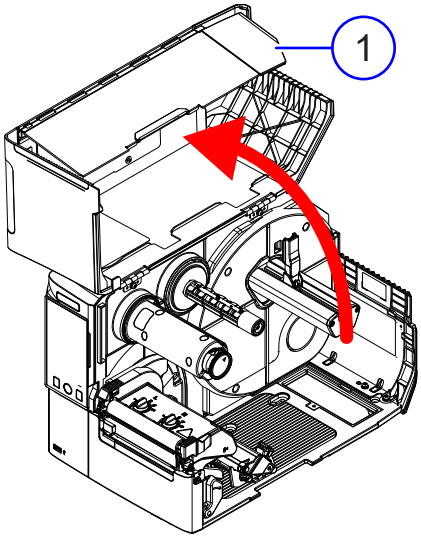

2 Remove three screws (S2) and remove the LABEL GUIDE (HOLDER) L (②).

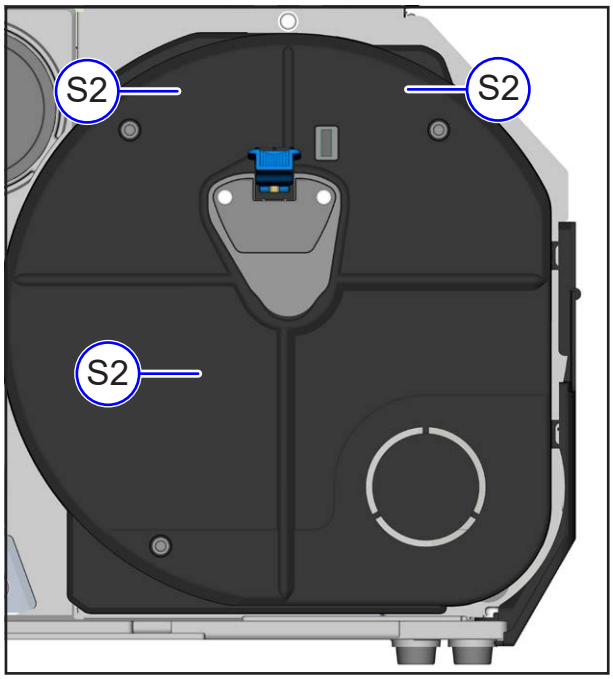

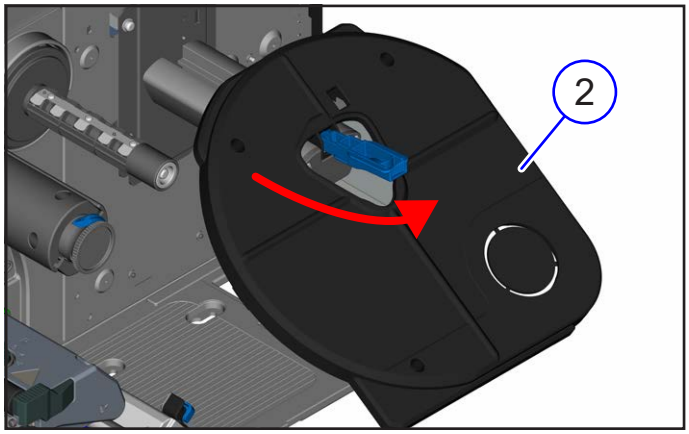

Notes on assembling

- First, engage the convex parts of the LABEL GUIDE (HOLDER) L with the concave parts of the frame.

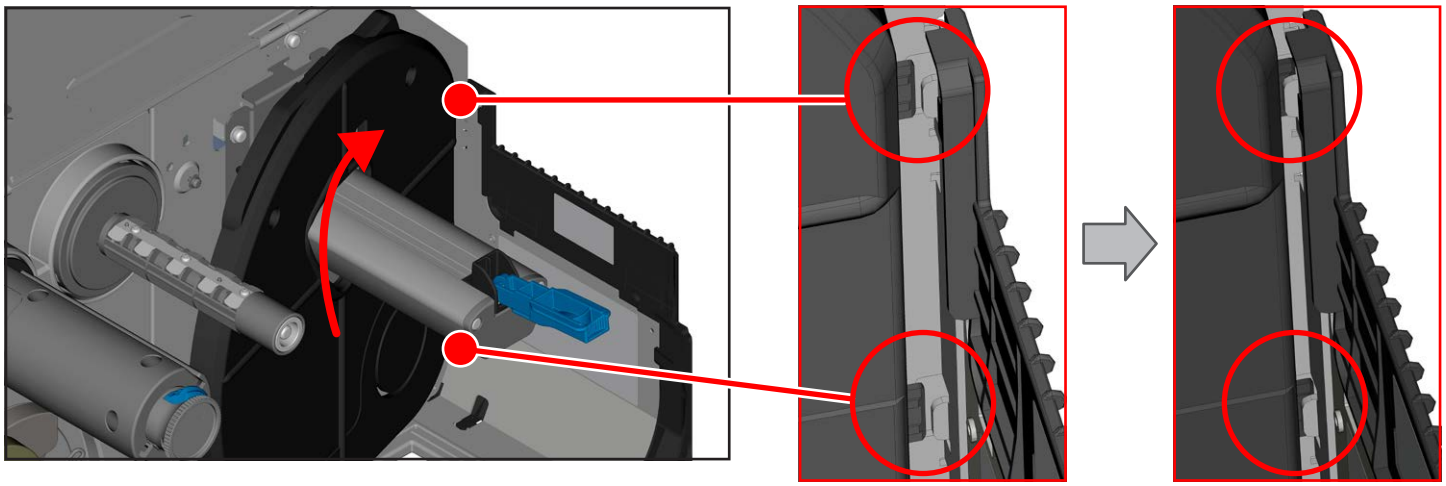

3 Remove four screws (S1) and remove the LABEL HOLDER ASSY (③).

4 Remove one screw (S7).

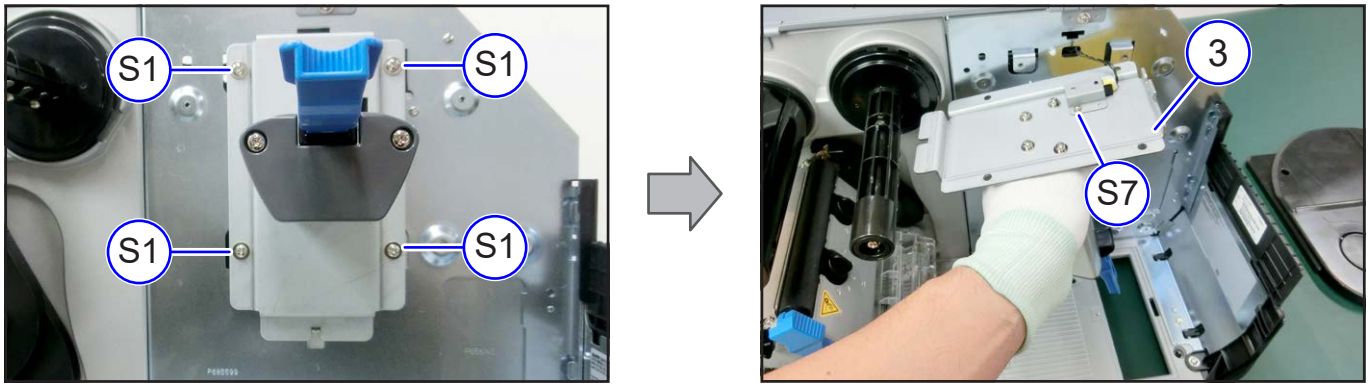

5 Disconnect one connector (④).

6 Remove one screw (S7) and remove the Label Near End Sensor (⑤).

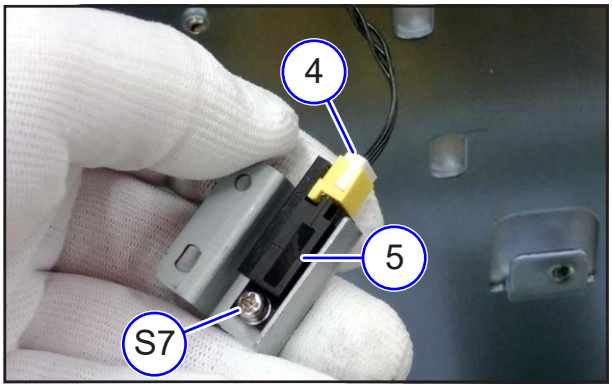

▶ From here, assembling procedure

7 Assemble the parts in the reverse order of the disassembly procedure.

4.5.5 Replacing the Head Open Sensor

10 min.

Required tools :

- Phillips screwdriver (#2)

1 Remove the GEAR FRAME ASSY (①).

Refer to 4.4.3 Replacing the GEAR FRAME ASSY

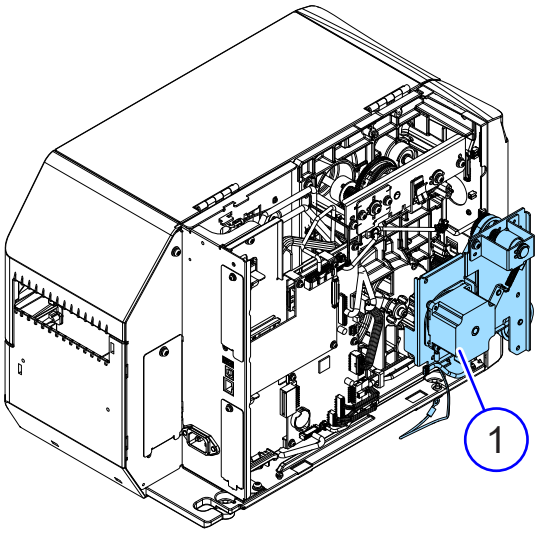

2 Remove one screw (S2) and remove the Head Open Sensor (②).

3 Disconnect one connector (③).

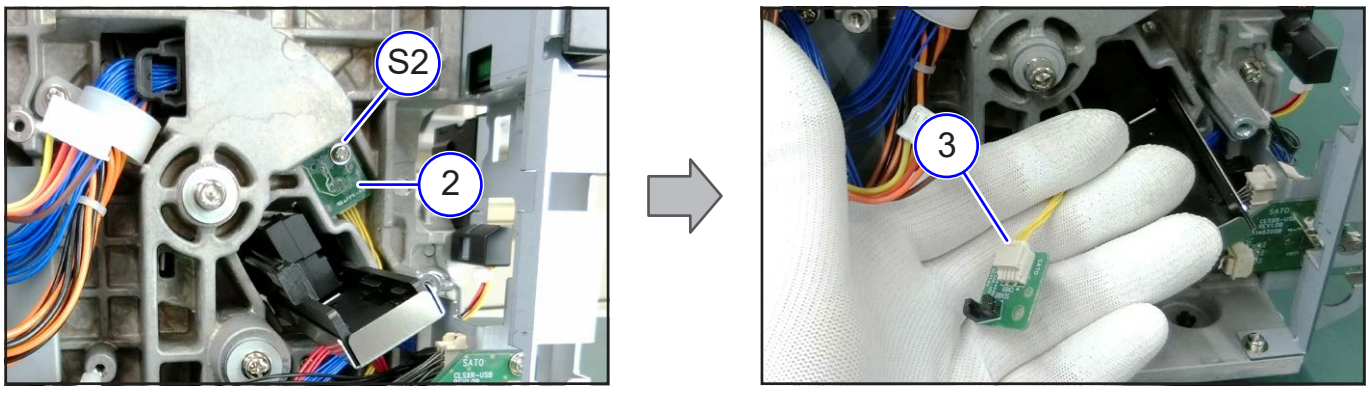

▶ From here, assembling procedure

4 Assemble the parts in the reverse order of the disassembly procedure.

4. 6 PCBs and Electrical Parts

4.6.1 Replacing the CONT PCB

10 min.

4.6.2 Replacing the ENGINE PCB

15 min.

Required tools :

- Phillips screwdriver (#2)

CAUTION CONT PCB

If the service mode can be started, create clone data.

If the clone data cannot be created, perform the initial settings after confirming with the customer.

CAUTION CONT PCB

When replacing the CONT PCB, check the following:

- There are three types of CONT PCB. Identify the type by the first two digits of the number (framed in red) on the sticker attached to the PCB.

A1xxxxxx	Global	CLSXR-CONT PCB ASSY(G)-LF
A2xxxxxx	Japan	CLSXR-CONT PCB ASSY(JP)-LF
A3xxxxxx	STD	CLSXR-CONT PCB ASSY(EX1)-LF

- The CONT PCB for the CL4-SXR and CL6-SXR is the same. Use the DIP switch SW2 to switch between the two.(CL4-SXR: OFF, CL6-SXR: ON)

DIP switch

SW1	SW2		SW3, 4
—	ON	OFF	OFF
	CL6-SXR	CL4-SXR	

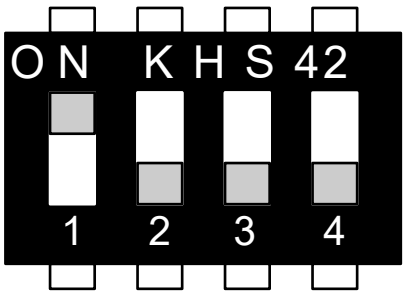

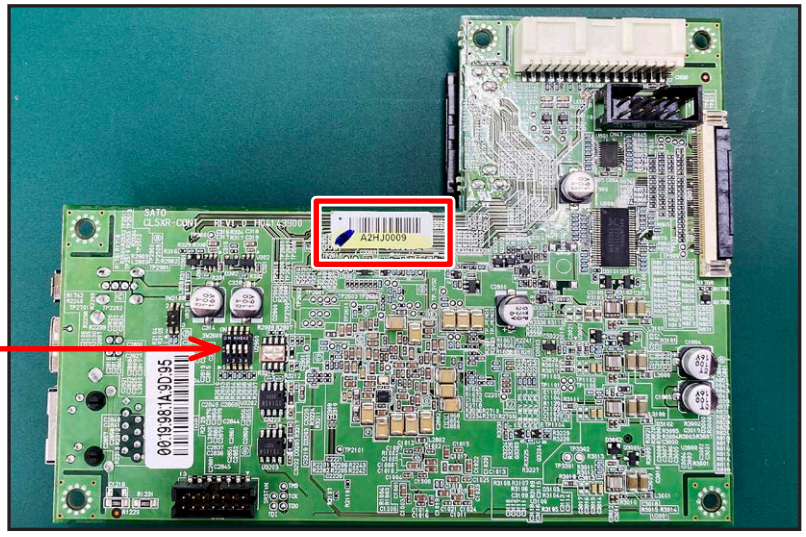

1 Remove one screw (S1).

2 Slide the COVER L (①) and remove it.

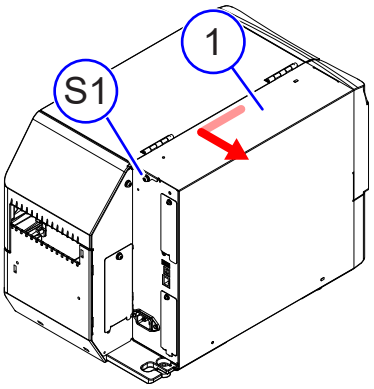

3 Unlock the connector and disconnect the connector (②).

4 Unlock the connector and disconnect the FFC (③).

Notes on assembling

• The FFC is locked when it is fully inserted.

5 Remove five screws (S2).

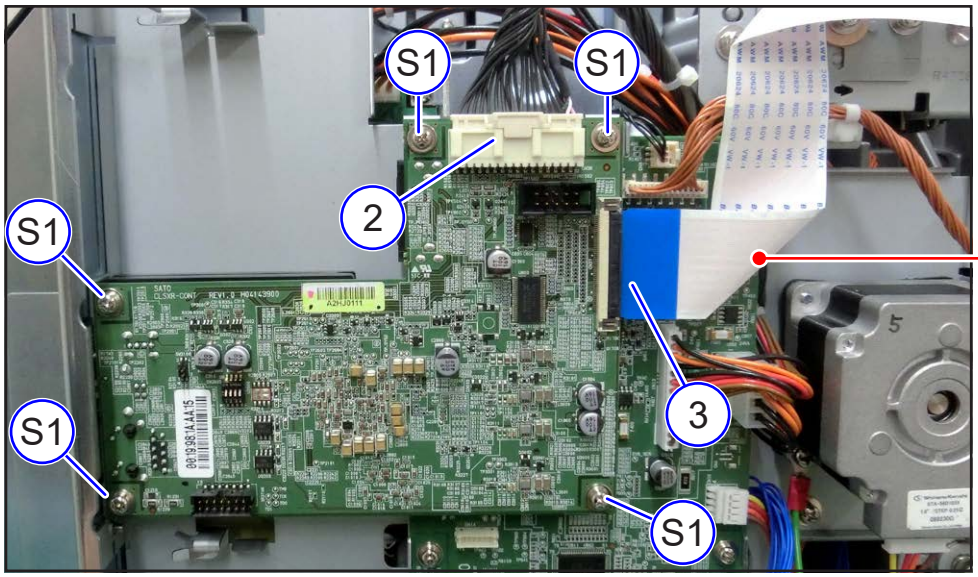

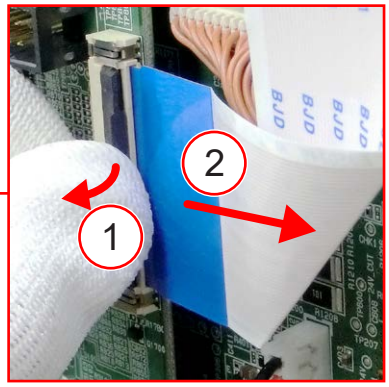

6 Remove the CONT PCB (④).

CAUTION

The CONT PCB is connected to the ENGINE PCB with the BtoB connector.

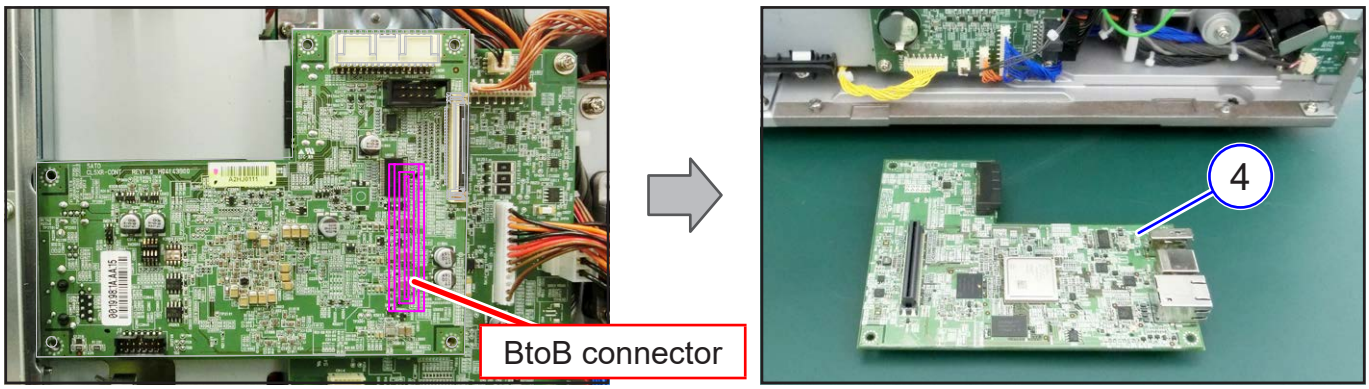

Notes on assembling

- The CONT PCB for the CL4-SXR and CL6-SXR is the same. Use the DIP switch SW2 to switch between the two. (CL4-SXR: OFF, CL6-SXR: ON)

  * Never change any switches other than SW2.

DIP switch

SW1	SW2		SW3, 4
—	ON	OFF	OFF
	CL6-SXR	CL4-SXR	

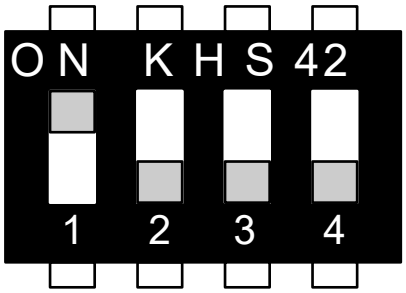

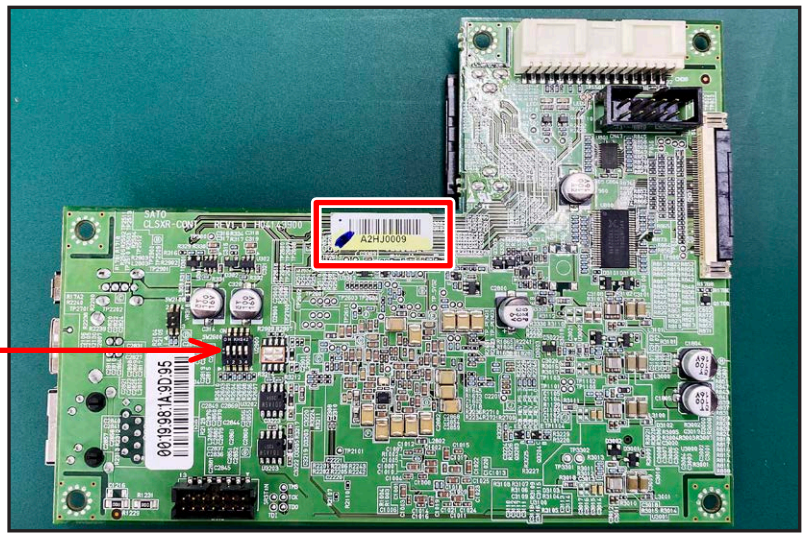

7 Disconnect twelve connectors.

8 Remove six screws (S2) and the SPACER (⑤), and remove the ENGINE PCB (⑥).

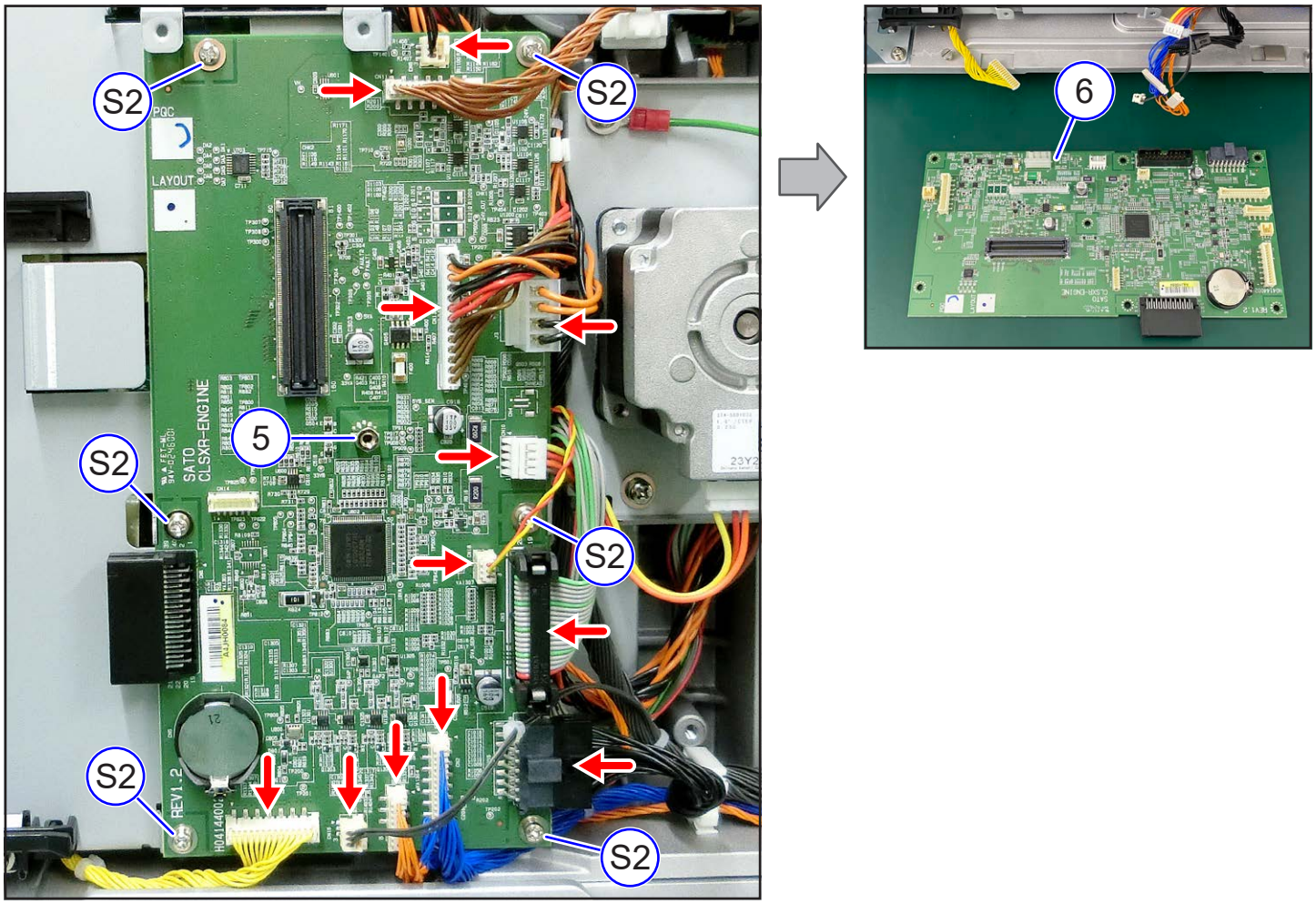

Notes on assembling

- Route the cable inward of the printer beyond the convex part.

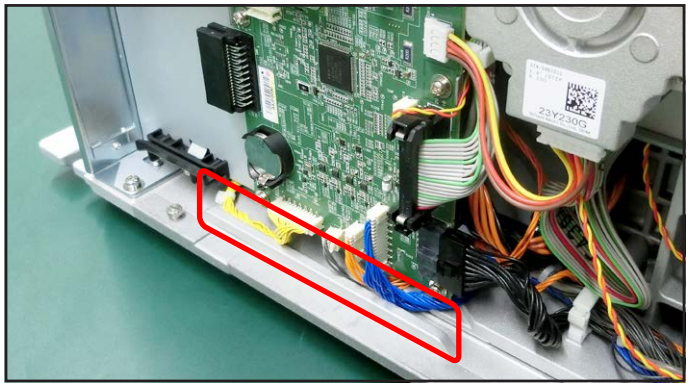

▶ From here, assembling procedure

9 Assemble the parts in the reverse order of the disassembly procedure.

4.6.3 Replacing the CONTROL PANEL ASSY

15 min.

Required tools :

- Phillips screwdriver (#2)

The following parts can be replaced.

- KB PCB
- SPEAKER
- LCD MODULE

1 Remove the OPEN COVER (①) and COVER L (②).

Refer to 4.2.1 Replacing the OPEN COVER, COVER L

2 Remove the FRONT COVER R (③) and FRONT COVER L (④).

Refer to 4.2.2 Replacing the FRONT COVER

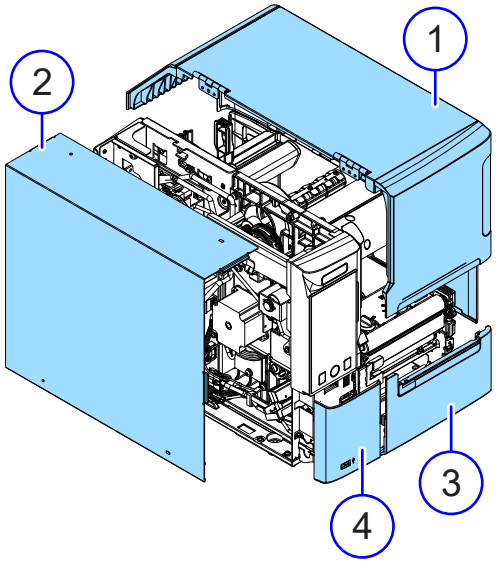

3 Disconnect one connector (⑤).

4 Unlock the connector and disconnect the FFC (⑥).

Notes on assembling

- Pass the FFC through the cable clip (⑦) before connecting it.
- The FFC is locked when it is fully inserted.

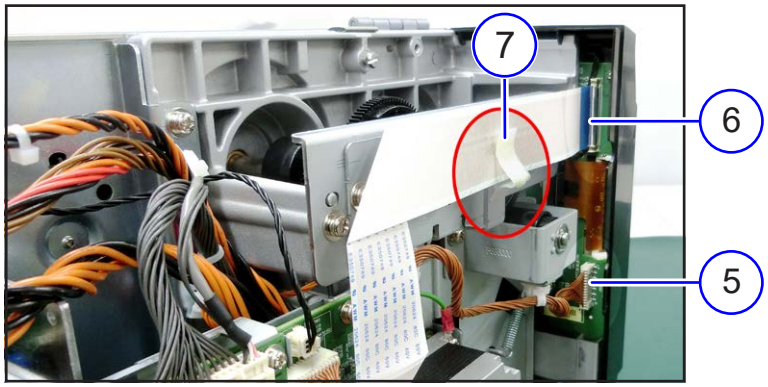

5 Remove one screw (S2) and remove the CONTROL PANEL ASSY(⑧).

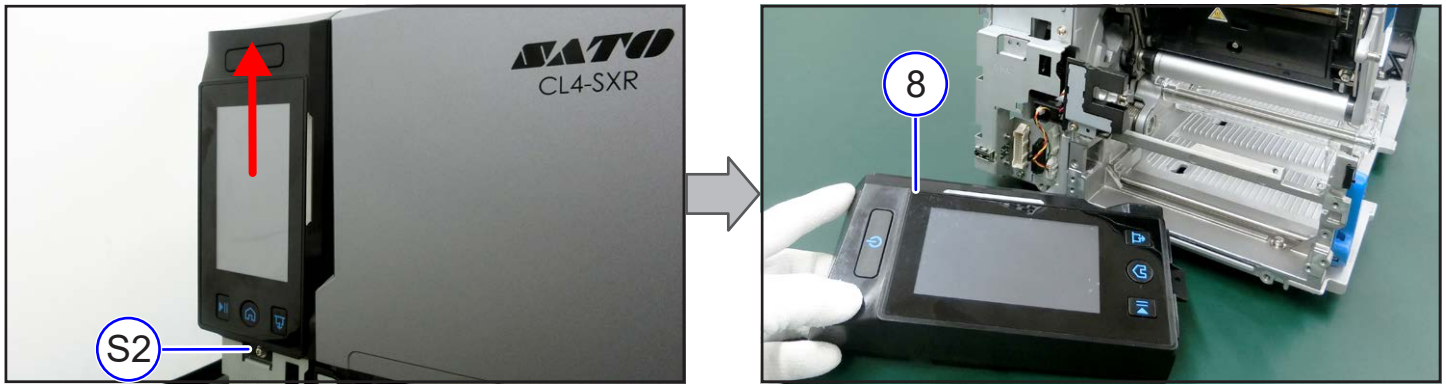

6 Disconnect one connector.

7 Remove four screws (S11) and remove the DISPLAY ASSY(⑨).

Notes on assembling

- Make sure that there is no dirt or dust on the panel of the case and LCD.
- After connecting the connector, route the cable.

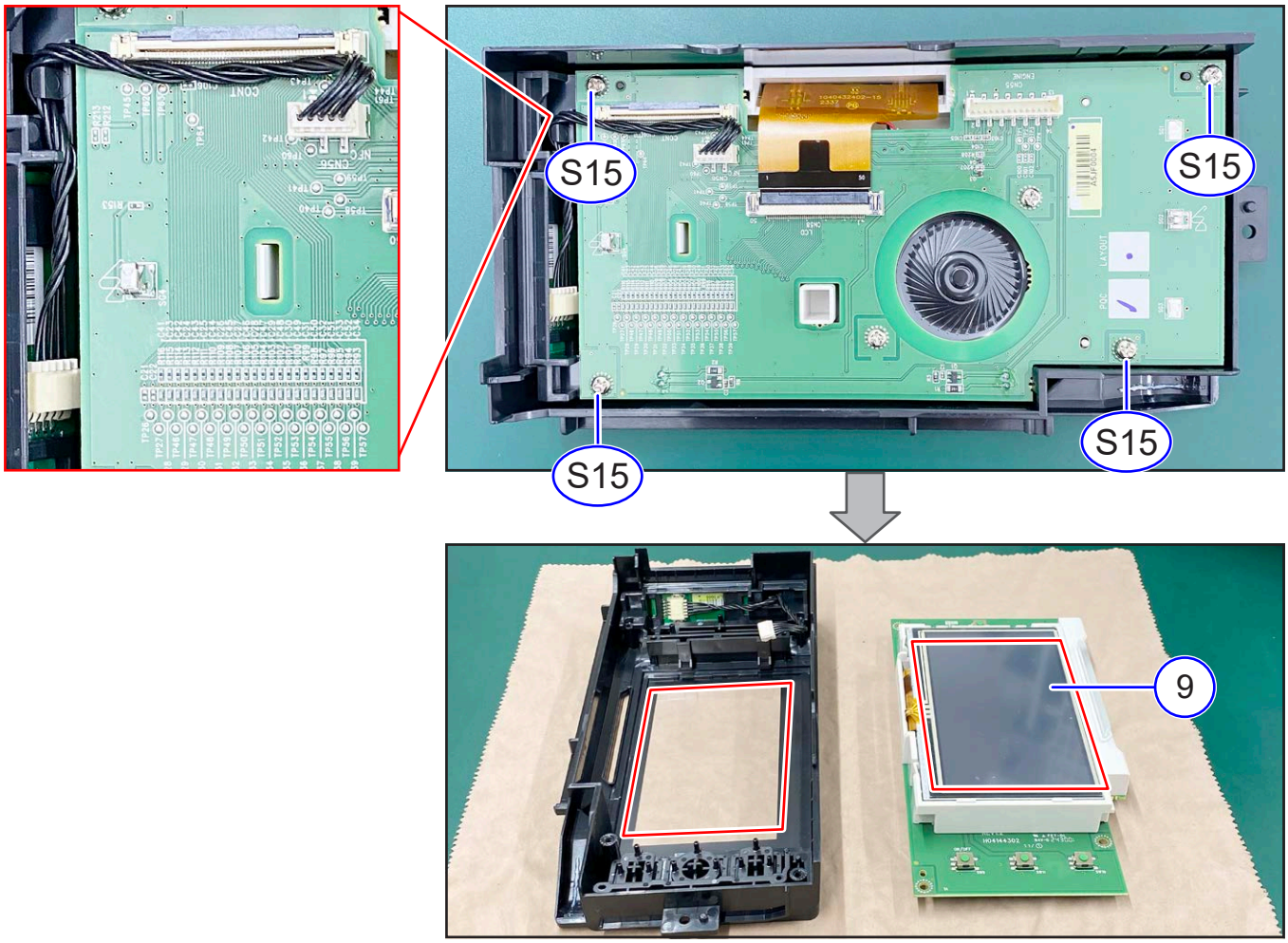

▶ From here, assembling procedure

8 Assemble the parts in the reverse order of the disassembly procedure.

4.6.4 Replacing the USB PCB

10 min.

Required tools :

- Phillips screwdriver (#2)

1 Remove the COVER L (①).

Refer to 4.2.1 Replacing the OPEN COVER, COVER L

2 Remove the FRONT COVER R (②) and FRONT COVER L (③).

Refer to 4.2.2 Replacing the FRONT COVER

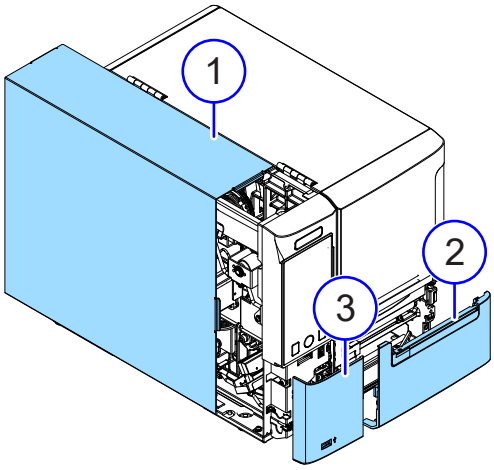

3 Remove two screws (S2) and remove the USB PCB (④).

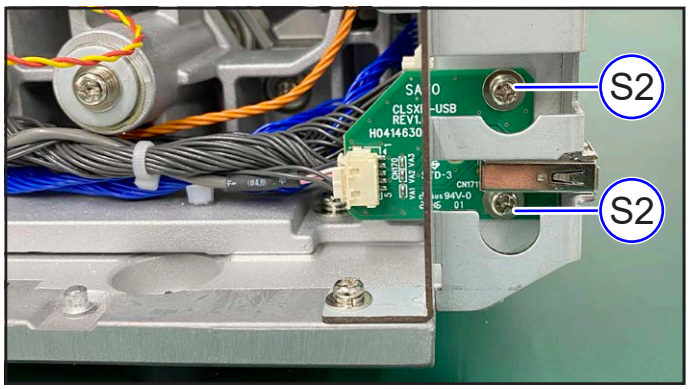

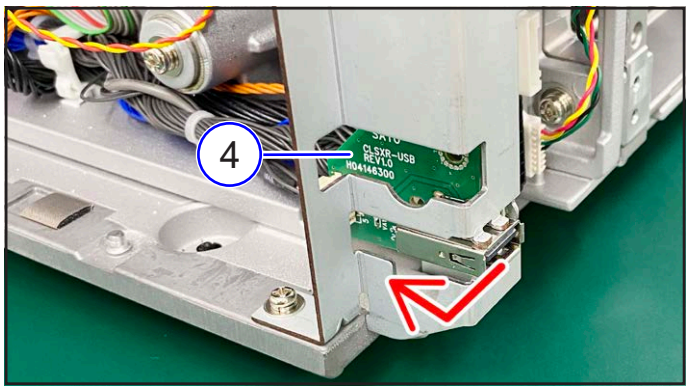

4 Disconnect the connector (⑤).

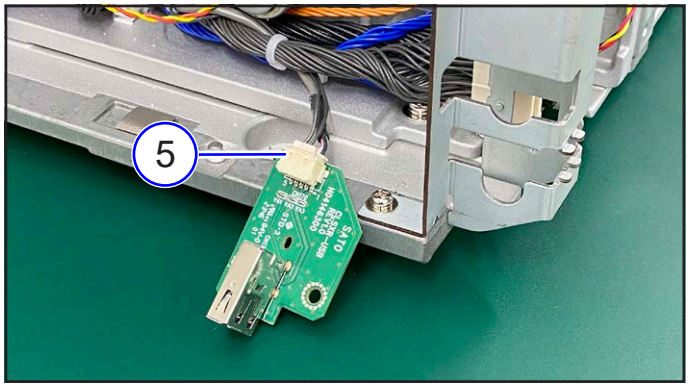

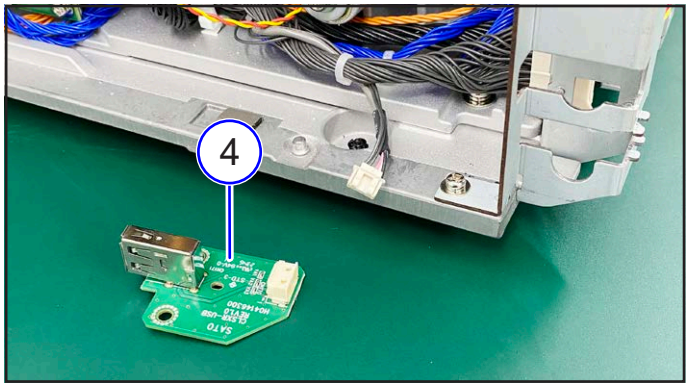

▶ From here, assembling procedure

5 Assemble the parts in the reverse order of the disassembly procedure.

4.6.5 Replacing the Power Supply Unit

25 min.

Required tools :

- Phillips screwdriver (#2)

CL4-SXR

1 Remove the COVER L (②).

CL6-SXR

1 Remove the OPEN COVER (①) and COVER L (②).

Refer to 4.2.1 Replacing the OPEN COVER, COVER L

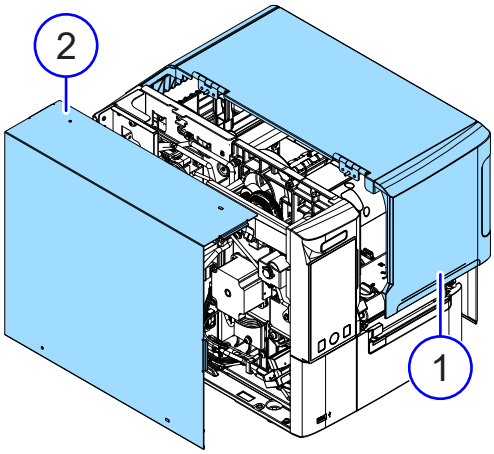

2 Unlock the connector and disconnect the FFC (③).

3 Disconnect thirteen connectors.

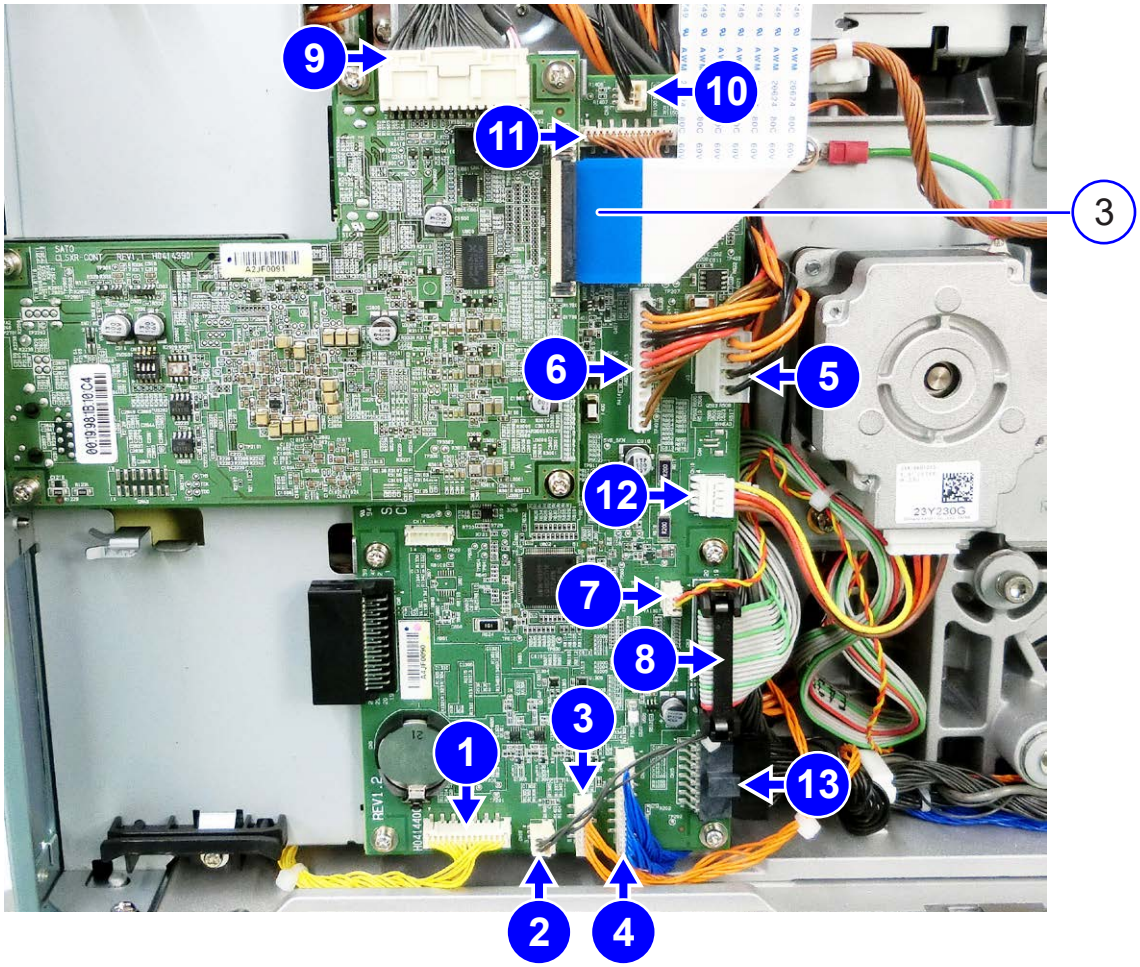

4 Unlock the two cable clamps and remove the cables from them.

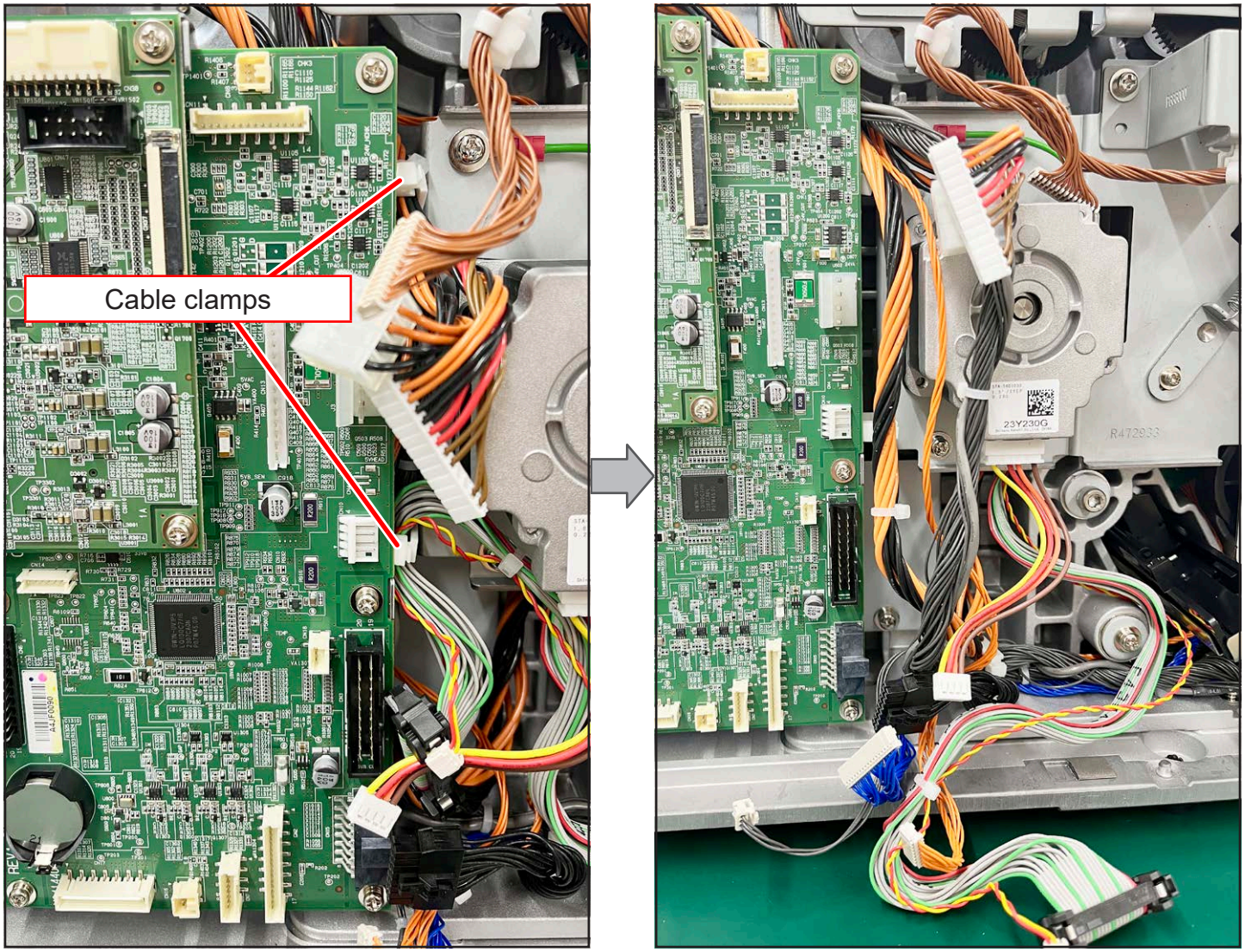

5 Remove two screws (S2) and remove the WIRELES IF BLIND COVER (④) and IF BLIND COVER (⑤).

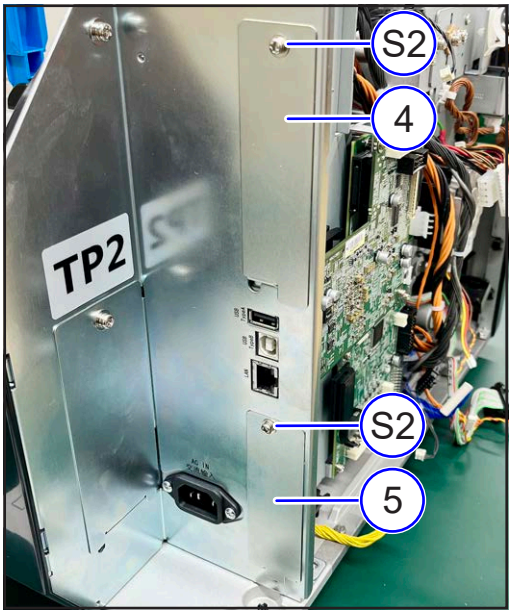

6 Remove three screws (S1).

7 Remove the MAIN PCB BR ASSY(⑥).

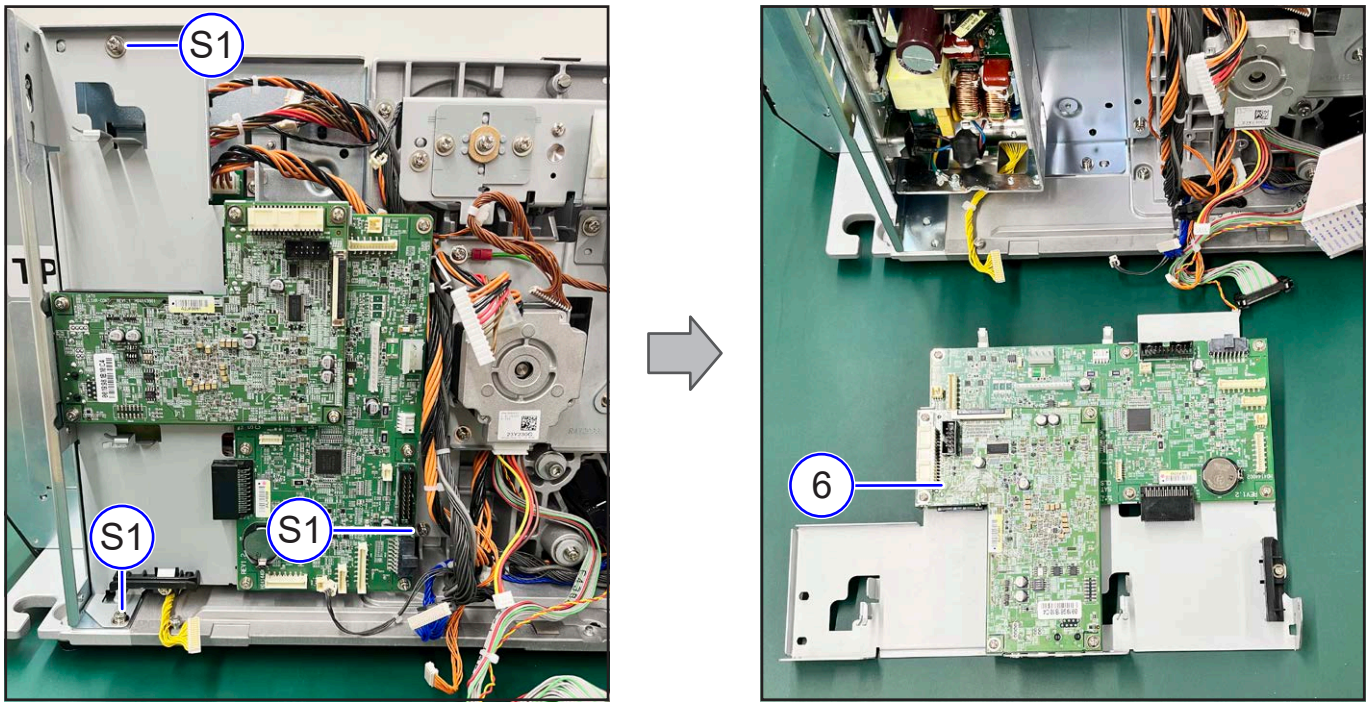

CL4-SXR

8 Disconnect three connectors.

9 Remove four screws (S21) and remove the power supply unit(⑦).

Notes on assembling

- Tighten the screws in the order of the numbers circled in red.

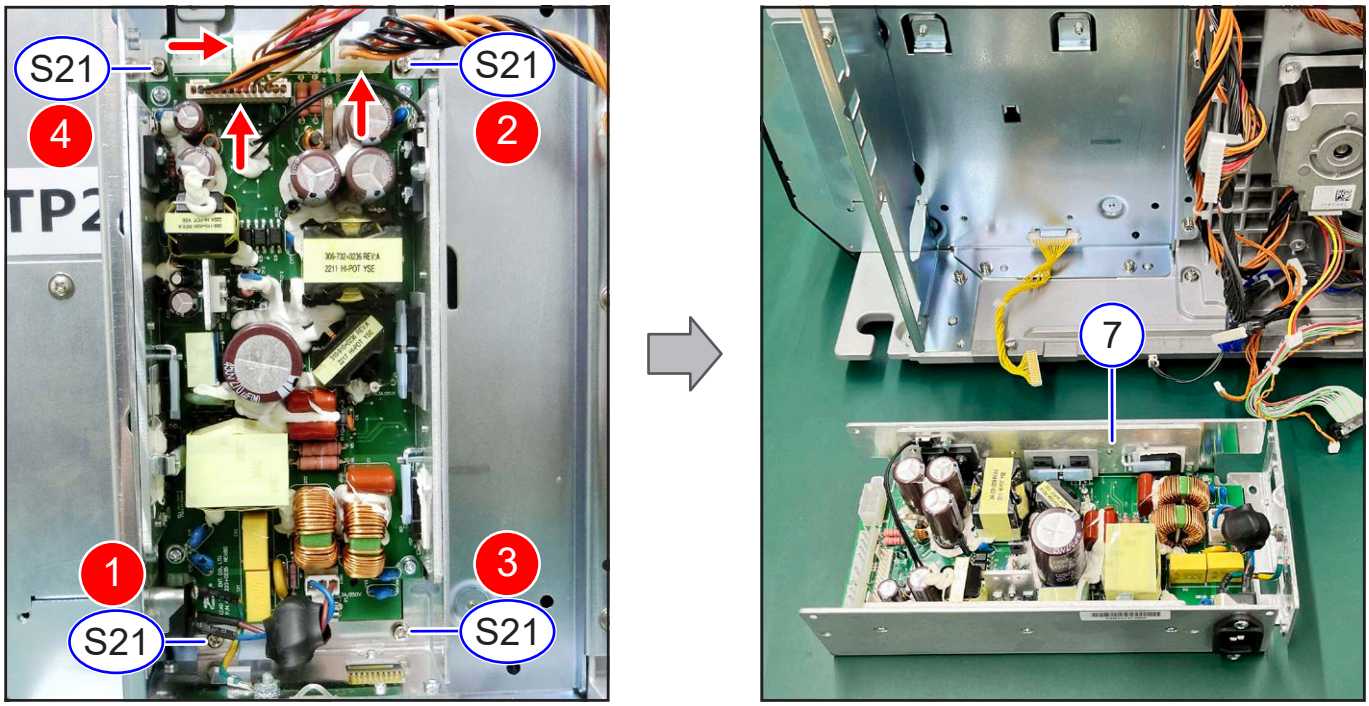

CL6-SXR

10 Disconnect three connectors.

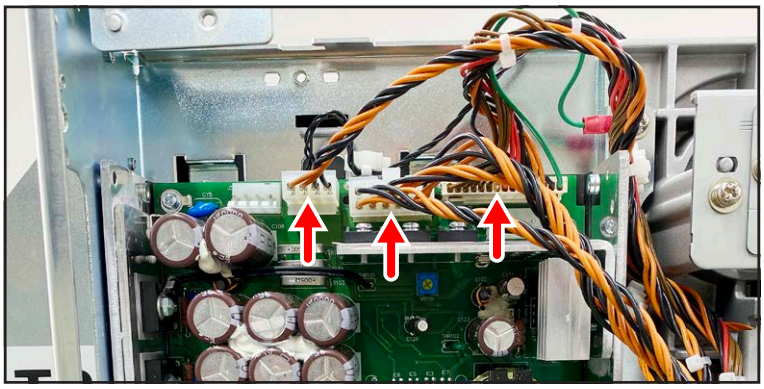

11 Remove three screws (S2) and remove the LABEL GUIDE (HOLDER) L(⑧).

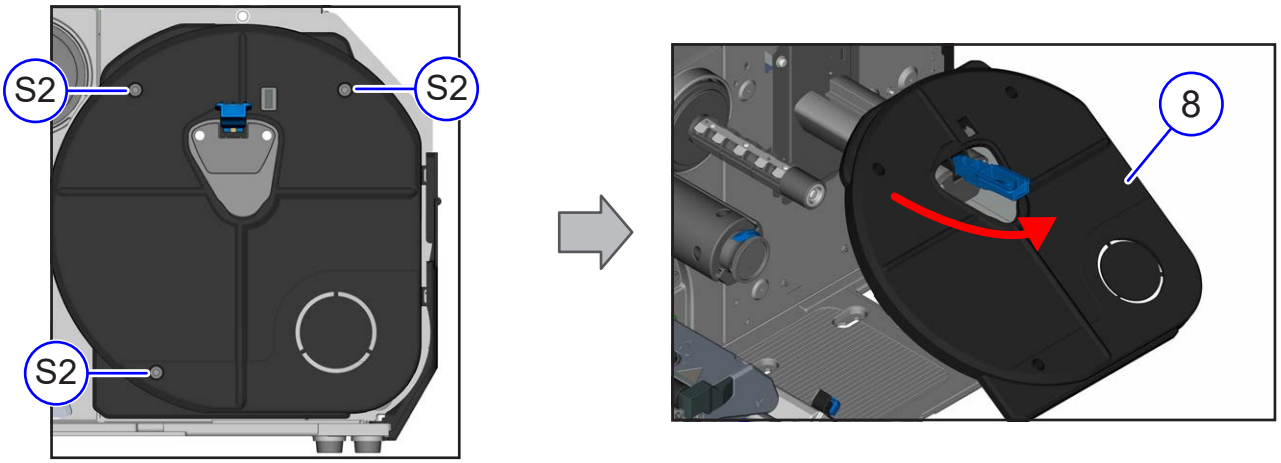

12 Remove four screws (S2) and remove the power supply unit(⑨).

Notes on assembling

- Tighten the screws in the order of the numbers circled in red.

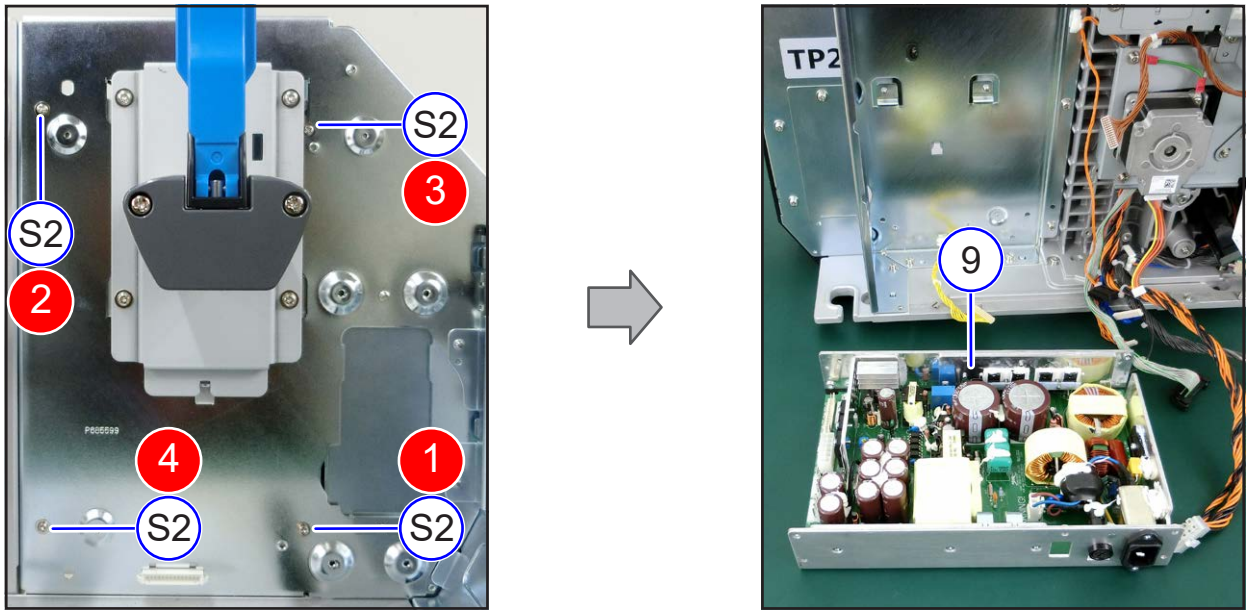

▶ From here, assembling procedure

13 Assemble the power supply unit.

CL4-SXR	CL6-SXR
Refer to Steps 9 and 8	Refer to Steps 12 and 10

14 Assemble the MAIN PCB BR ASSY and fix it with three screws (S1).

15 Fix the WIRELES IF BLIND COVER (④) and IF BLIND COVER (⑤) with two screws (S2).

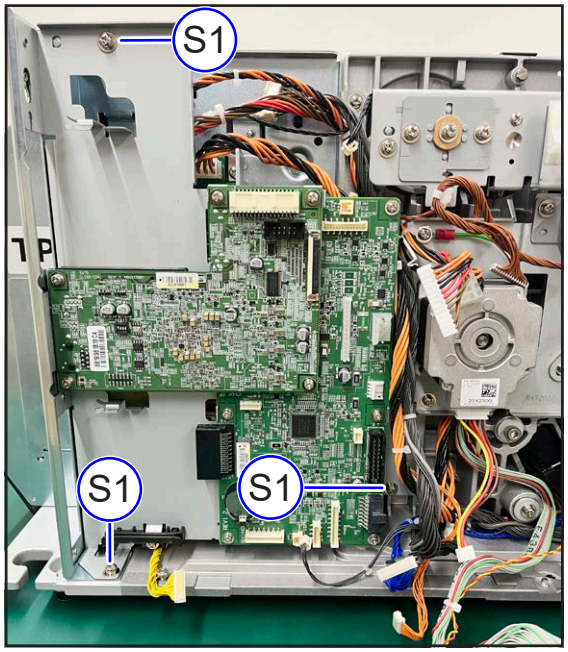

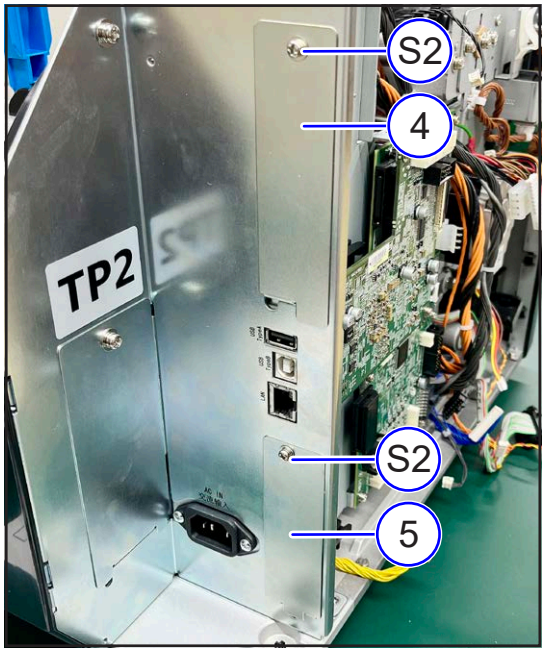

16 Connect the four connectors (① to ④).

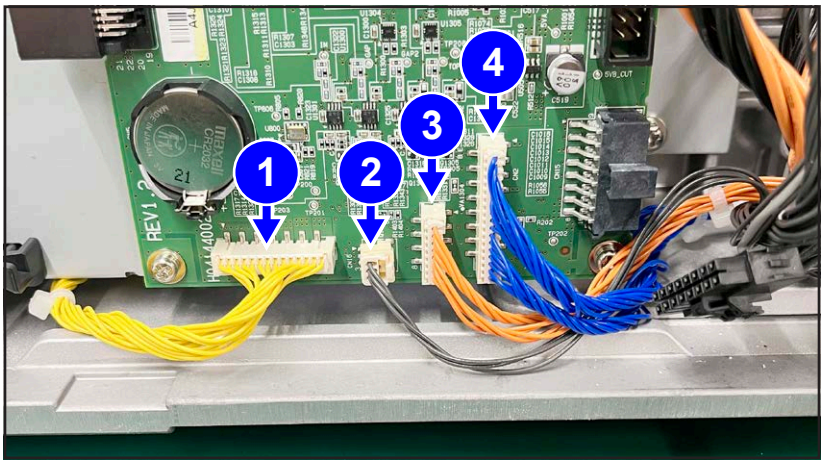

17 Route the cables.

(1) Bundle the cables (a, b, c) with cable clamps (A, B).

(2) Connect the connectors (⑤, ⑥), bundle the cables with the cable clamp (A), and lock the clamp.

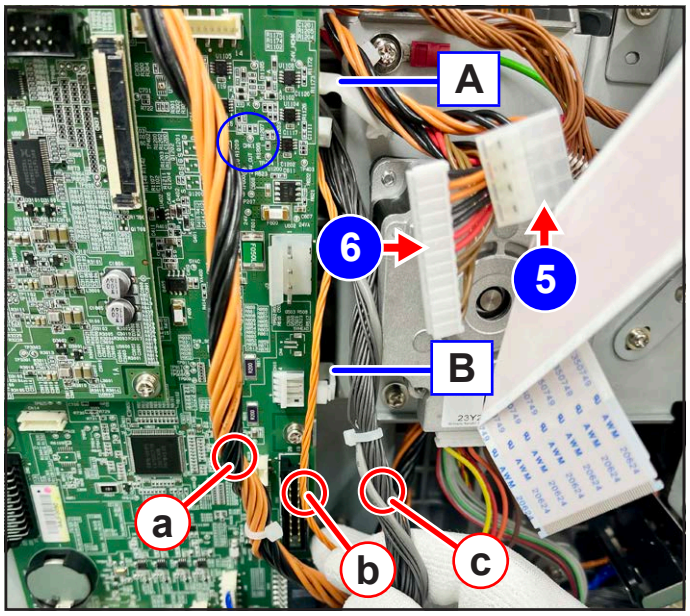

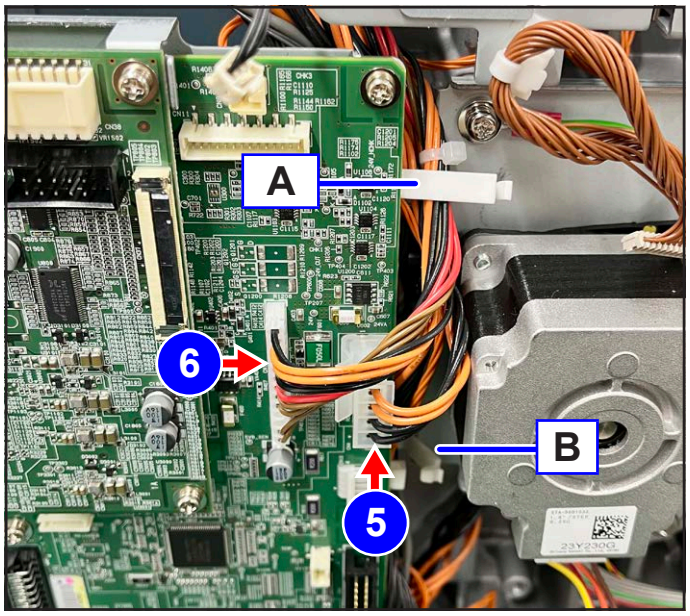

(3) Connect the connectors (⑦, ⑧), bundle the cables with the cable clamp (B), and lock the clamp.

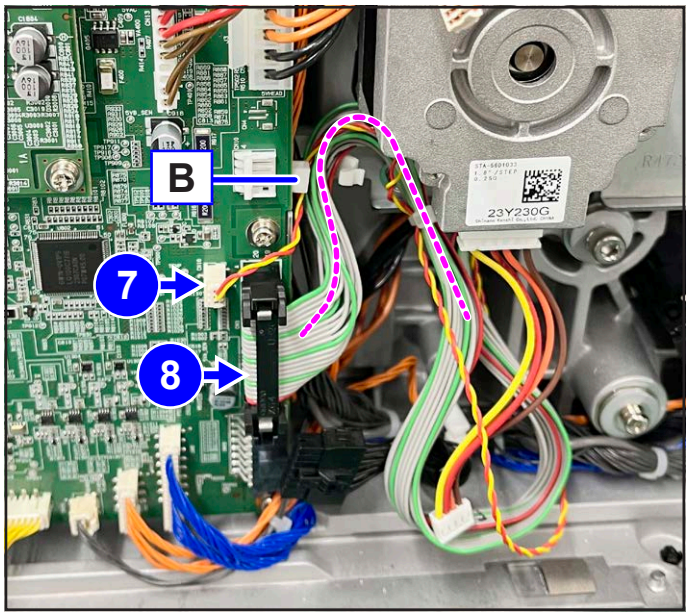

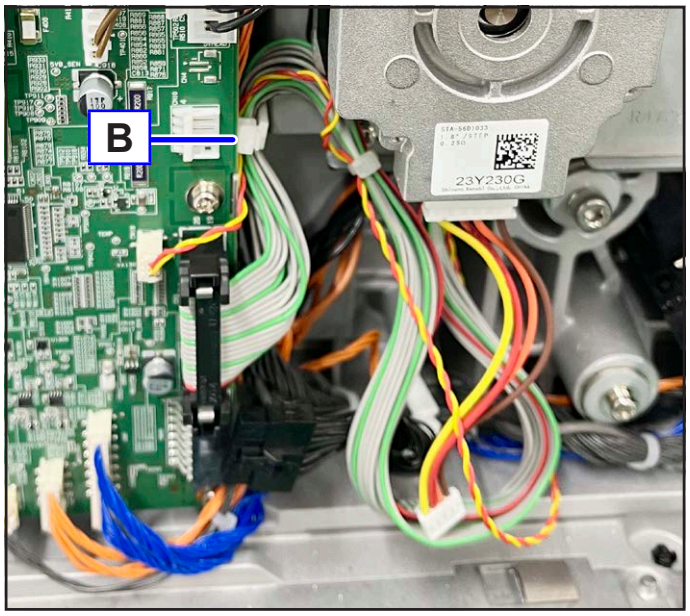

(4) Connect the connectors (⑨ to ⑬).

Notes on assembling

• Make sure that 13 cables are connected.

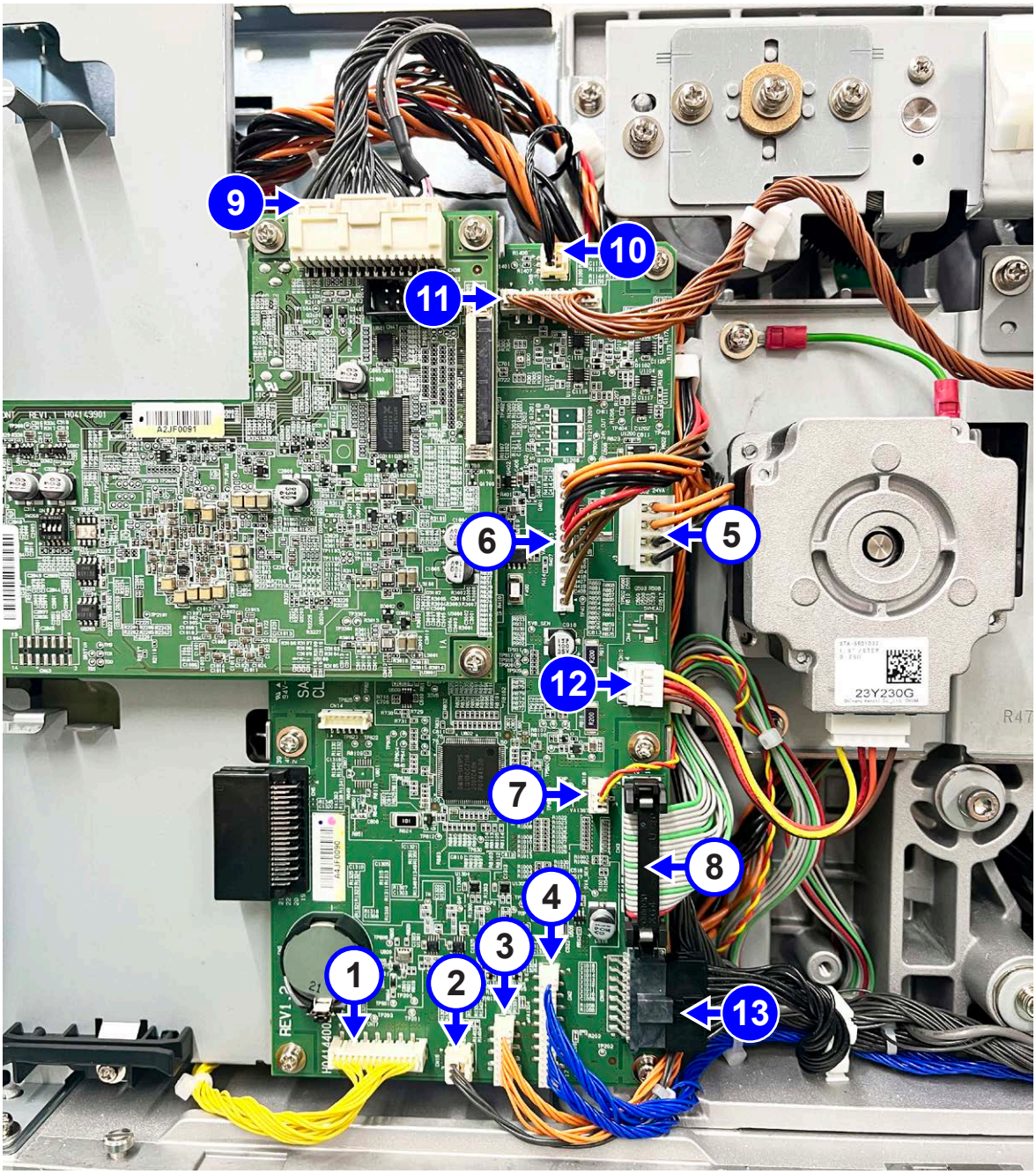

18 Pass the FFC through the cable clip (①) and then connect it to the connector (②).

Notes on assembling

• The FFC is locked when it is fully inserted.

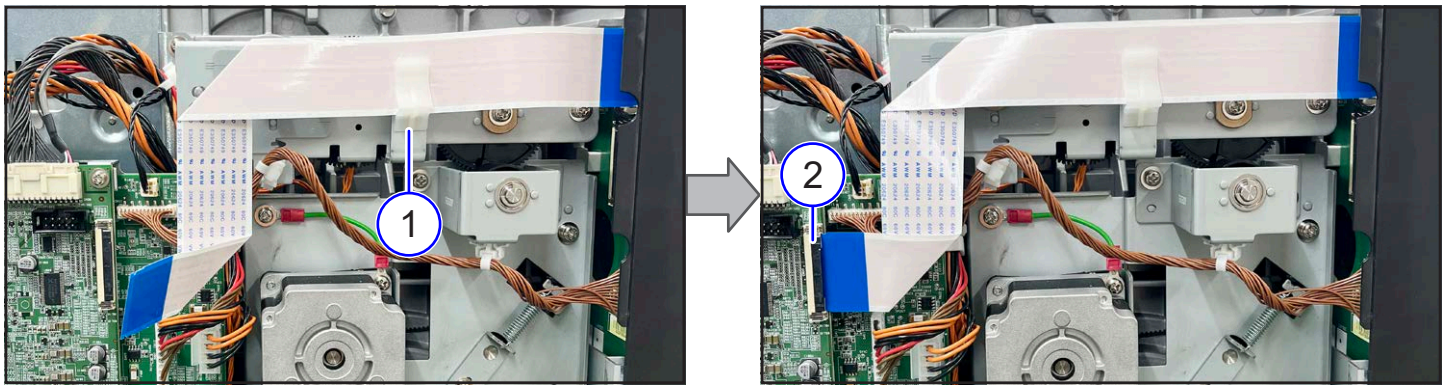

Notes on assembling

• Route the cable inward of the printer beyond the convex part.

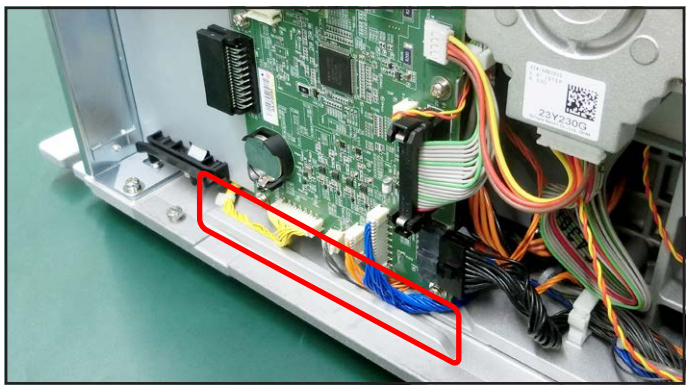

CL4-SXR

19 Assemble the COVER L (②).

CL6-SXR

20 Assemble the OPEN COVER (①) and COVER L (②).

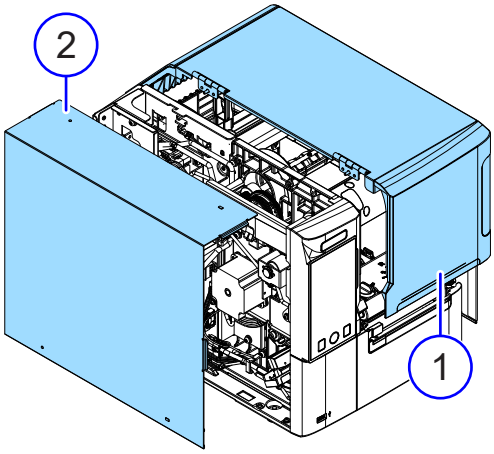

Refer to 4.2.1 Replacing the OPEN COVER, COVER L

4.6.6 Replacing the Coin Battery (CR2032)

5 min.

Required tools :

- Phillips screwdriver (#2)

CAUTION

There is a risk of explosion if the battery is replaced with an incorrect type.
Dispose of used batteries according to instructions.

1 Remove the COVER L (①).

Refer to 4.2.1 Replacing the OPEN COVER, COVER L

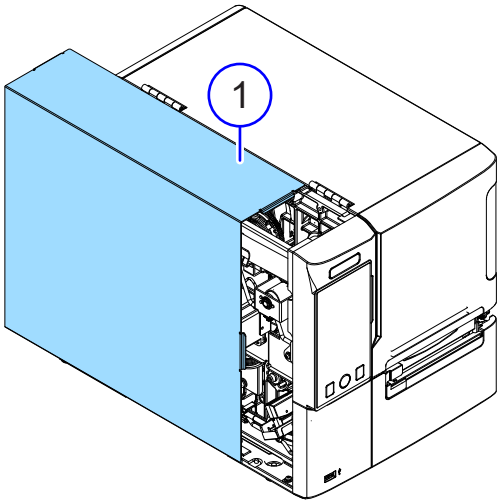

2 Remove the coin battery (CR2032).

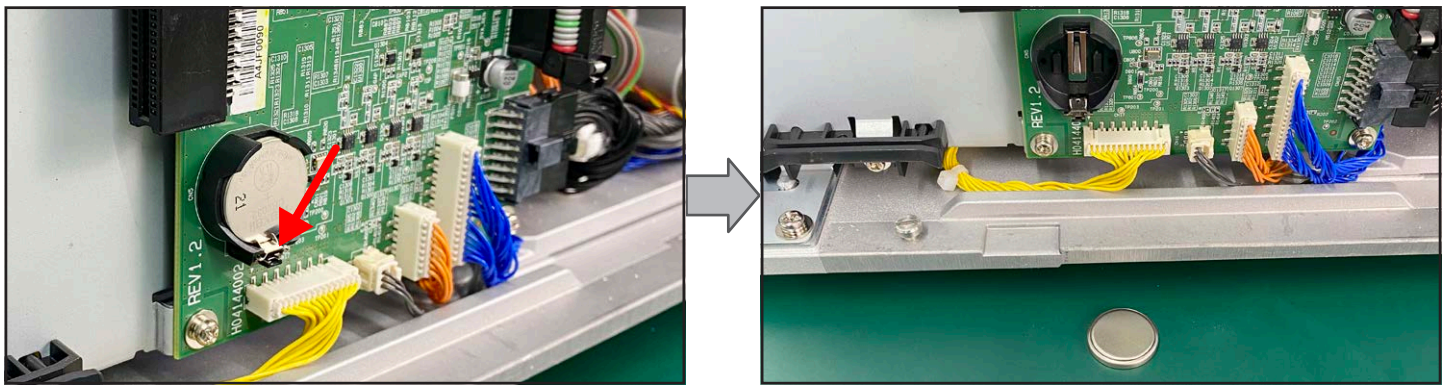

▶ From here, assembling procedure

3 Assemble the parts in the reverse order of the disassembly procedure.

5 Installation of Options

Back to top

This chapter describes how to remove and install the options.

5. 1 Removing the Front Covers (Standard) and Top Sensor

5. 2 Standard → Installing the CUTTER KIT

5. 3 Standard → Installing the ROTARY CUTTER (CL4-SXR Only)

- ROTARY CUTTER KIT
- ROTARY CUTTER HP KIT

5. 4 Standard → Installing the LINERLESS CUTTER KIT (CL4-SXR Only)

5. 5 Standard → Installing the DISPENSER KIT

- DISPENSER KIT
- LINER REWINDER KIT

5. 6 Installing the WIRELESS KIT

- WLAN/BLUETOOTH KIT
- CELLULAR I/F KIT
- WLAN/BLUETOOTH and CELLULAR I/F KIT

5. 7 Installing the RS232C/EXT KIT

5. 8 Installing the φ265mm HOLDER KIT

5. 9 Installing the RFID KIT

5. 1 Removing the Front Covers (Standard) and Top Sensor

1 Open the OPEN COVER (①) .

2 Remove two screws (S2) .

3 Remove the FRONT COVER R (②) and FRONT COVER L (③) in that order.

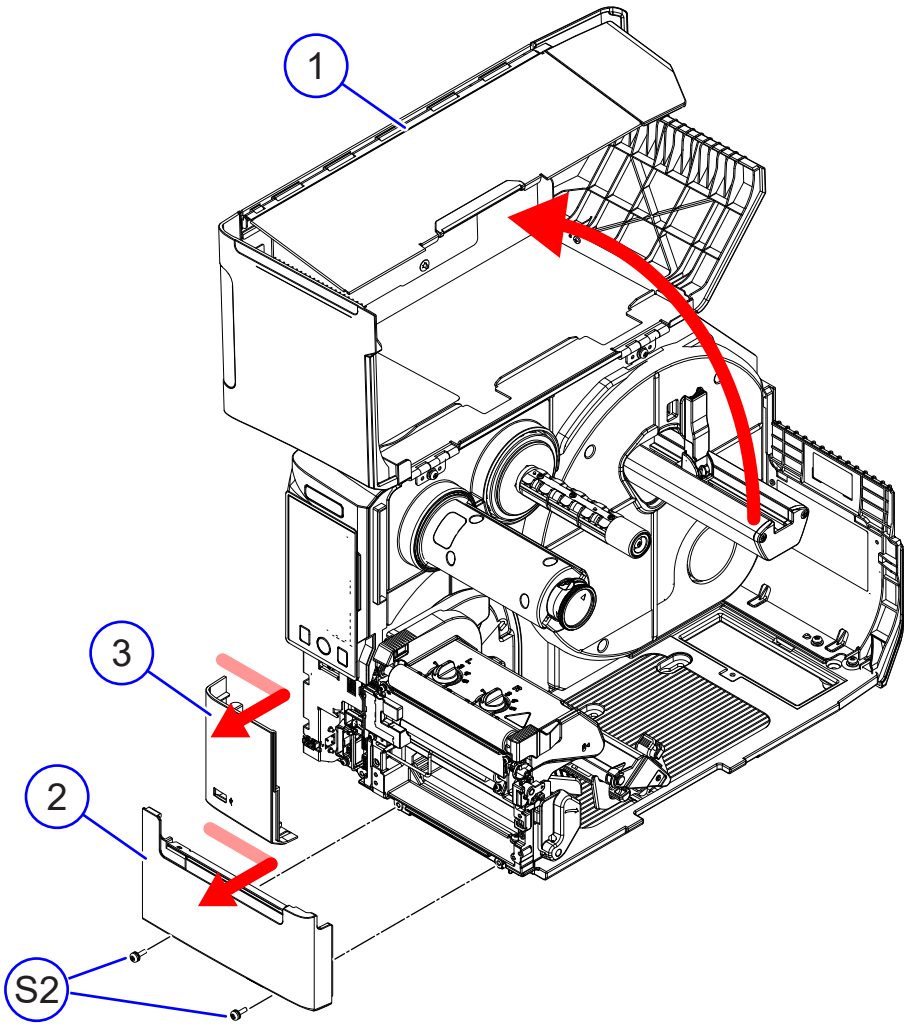

4 Disconnect the cable (④) .

5 Remove one screw (S2) and remove the top sensor (⑤) .

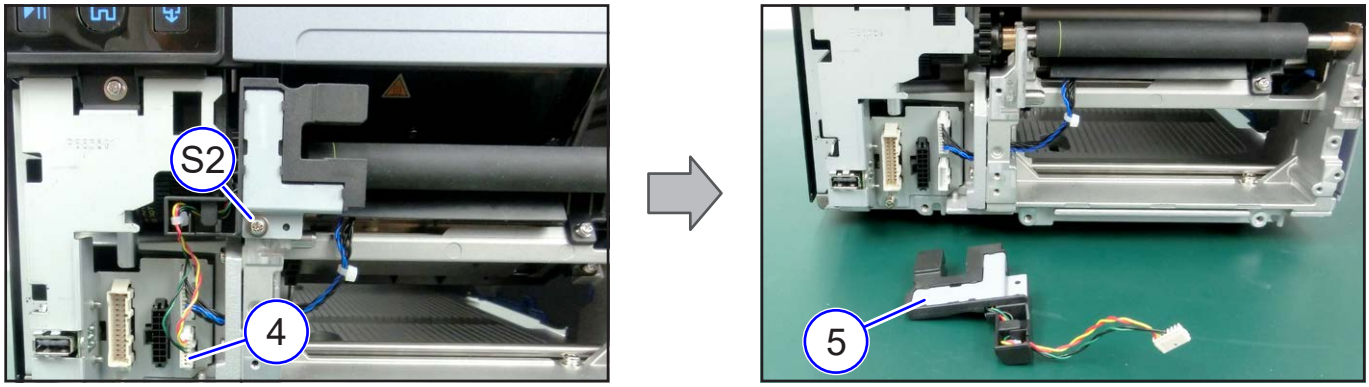

5. 2 Standard → Installing the CUTTER KIT

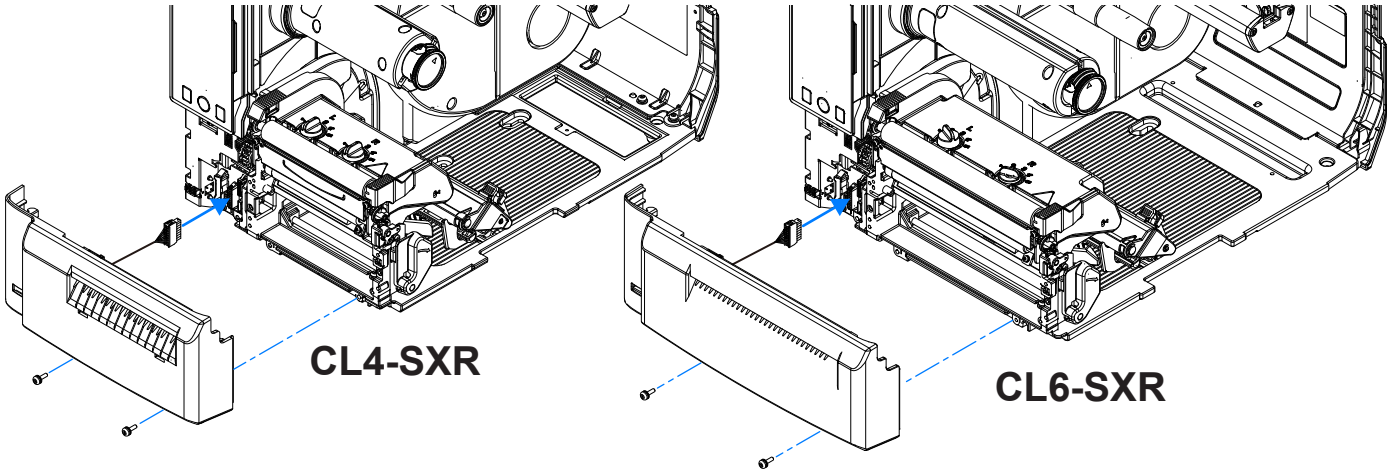

1 Remove the FRONT COVER R (①), FRONT COVER L (②) and the top sensor (③).

Refer to 5. 1 Removing the Front Covers (Standard) and Top Sensor

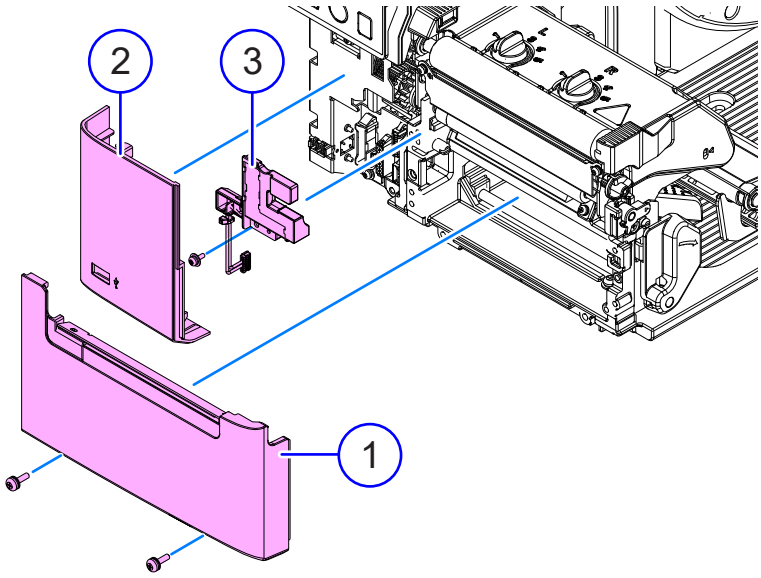

Parts to be discarded: FRONT COVER R (①) and two mounting screws, FRONT COVER L (②), top sensor (③) and one mounting screw

2 Connect the connector (③) .

3 Attach the cutter unit (④⑤) and fix it with two attached screws (⑥) .

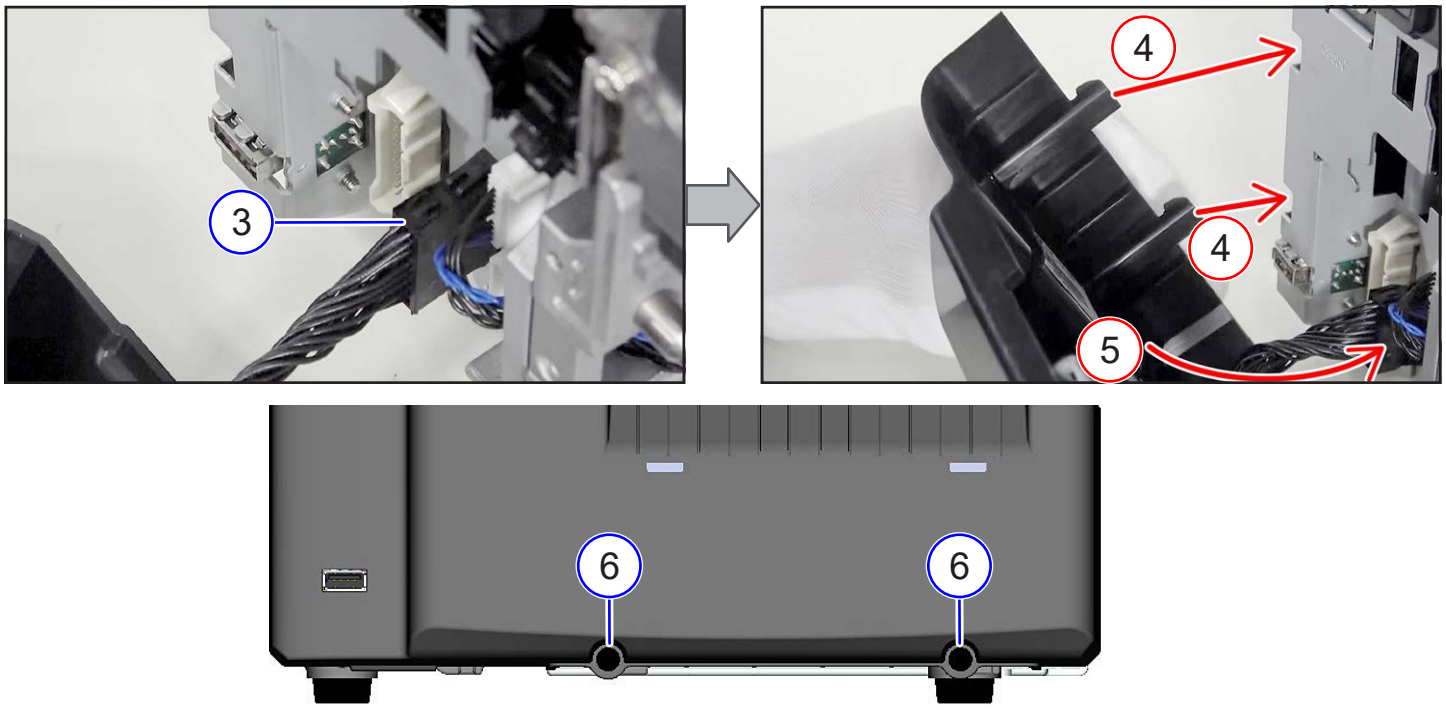

5. 3 Standard → Installing the ROTARY CUTTER (CL4-SXR Only)

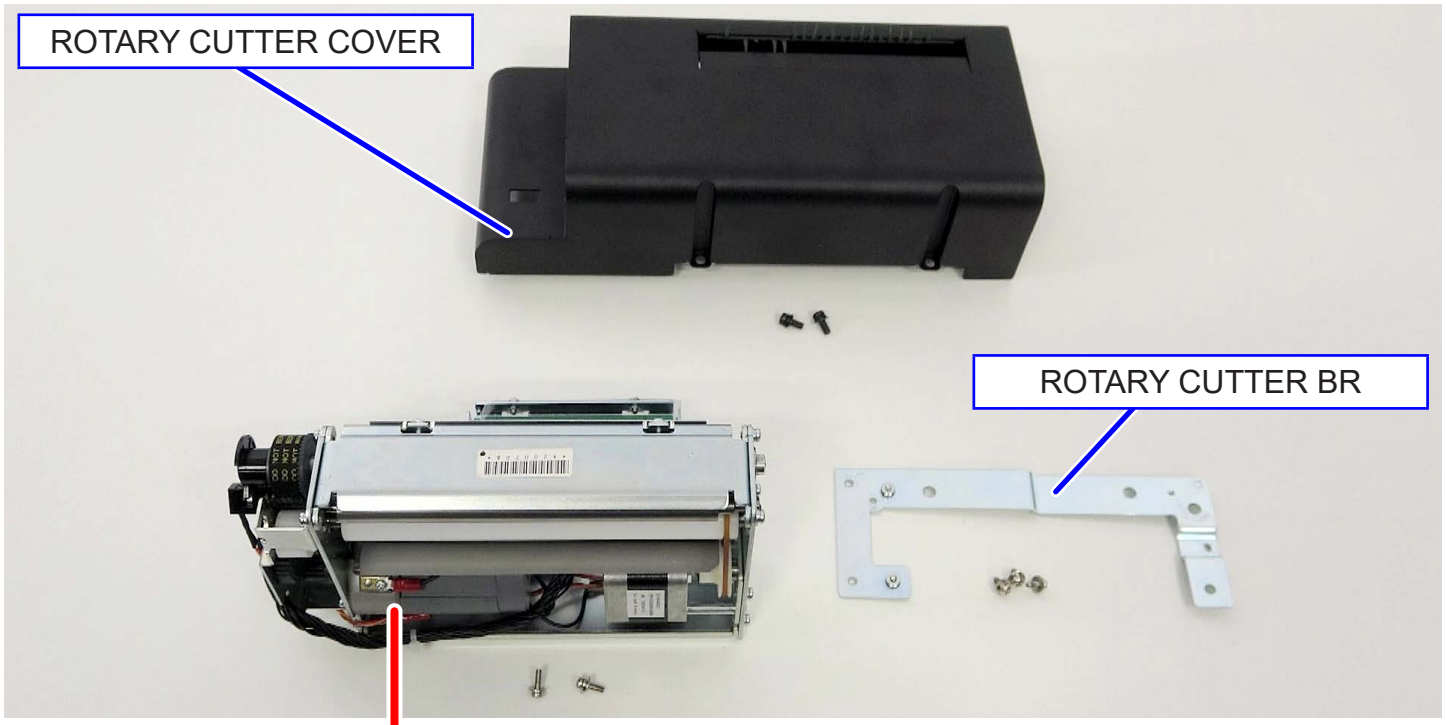

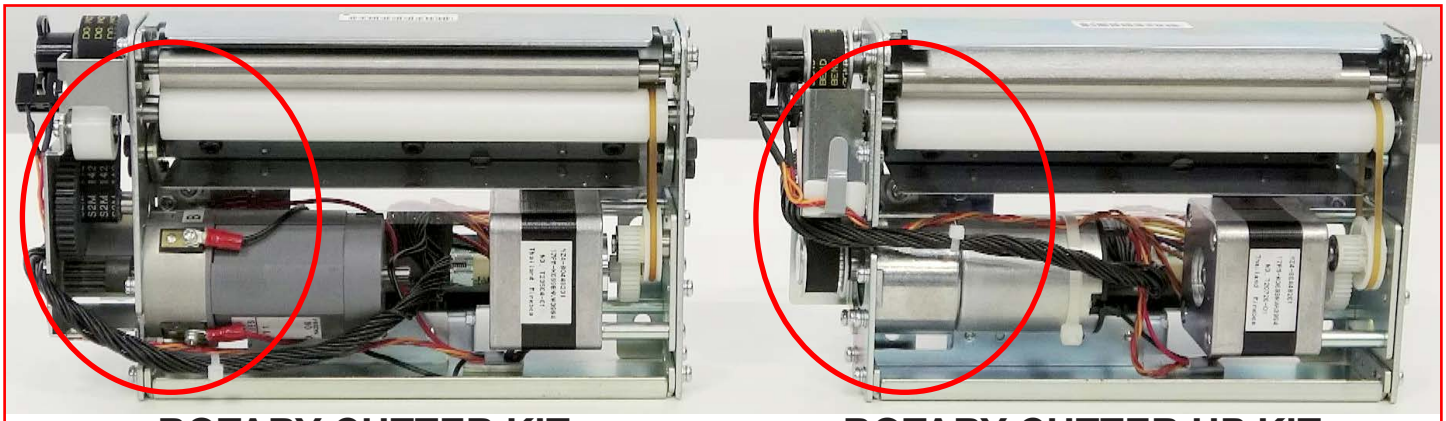

ROTARY CUTTER KIT

ROTARY CUTTER HP KIT

1 Remove the FRONT COVER R (①), FRONT COVER L (②) and the top sensor (③).

Refer to 5. 1 Removing the Front Covers (Standard) and Top Sensor

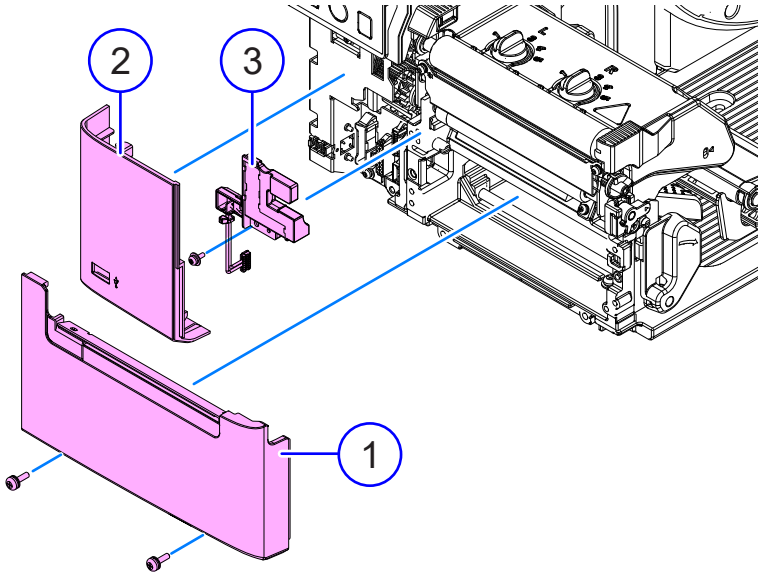

Parts to be discarded: FRONT COVER R (①) and two mounting screws, FRONT COVER L (②), top sensor (③) and one mounting screw

2 Attach the ROTARY CUTTER BR (④) and fix it with three attached screws (⑤) .

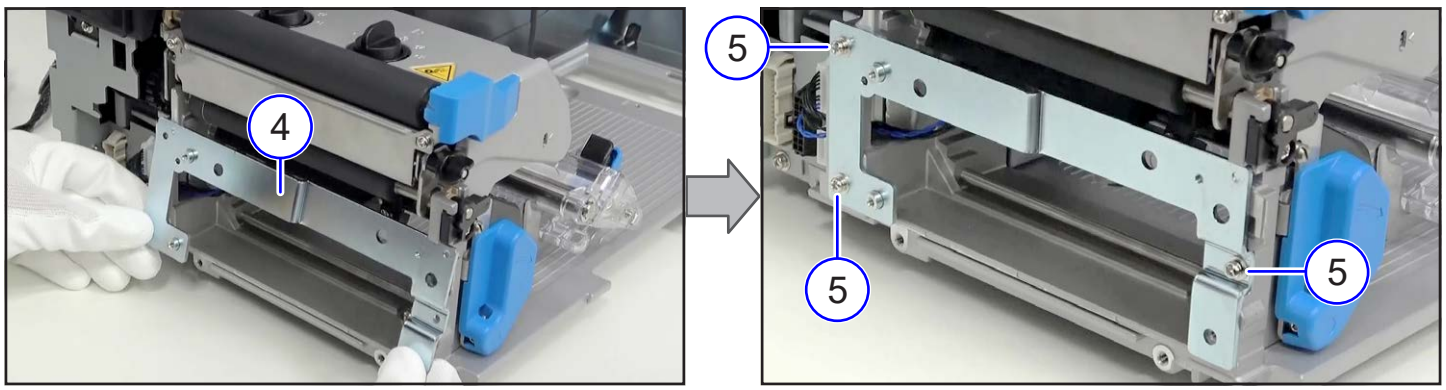

3 If the ROTARY CUTTER KIT has packing material (⑥), remove it.

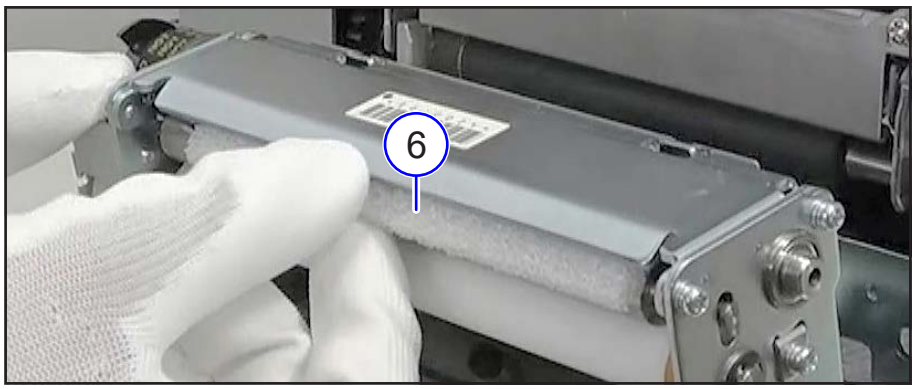

4 Connect the connector (⑦) and attach the ROTARY CUTTER KIT (⑧) .

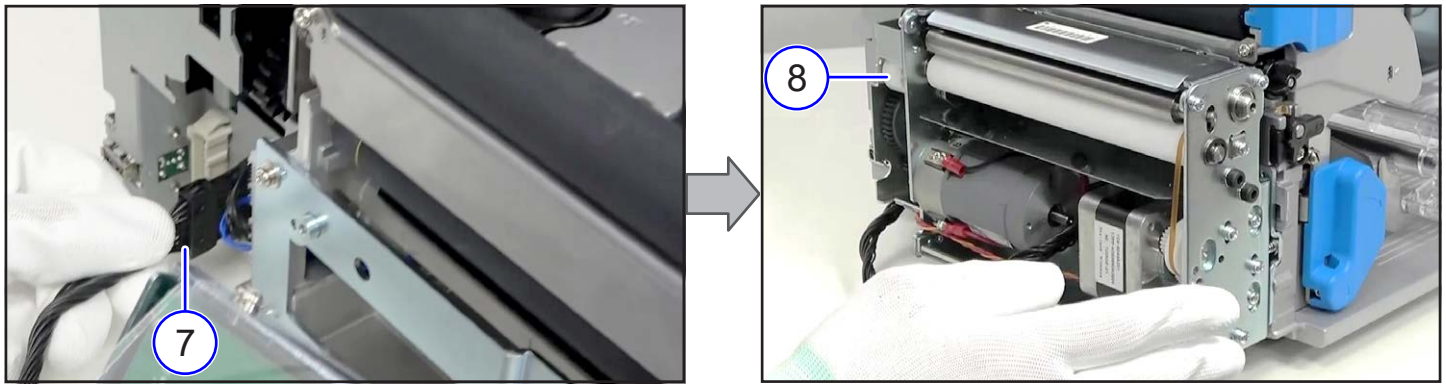

5 Fix it with four attached screws (⑨) .

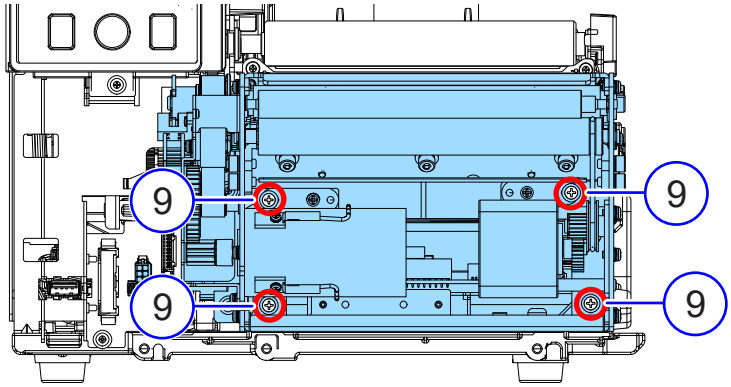

6 Attach the ROTARY CUTTER COVER (⑩) and fix it with two attached screws (⑪) .

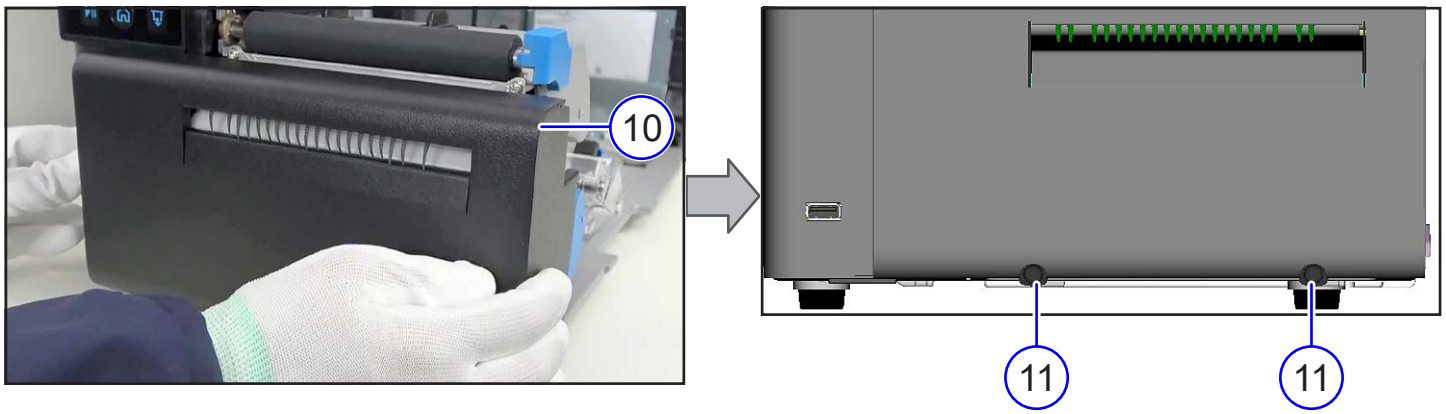

5. 4 Standard → Installing the LINERLESS CUTTER KIT (CL4-SXR Only)

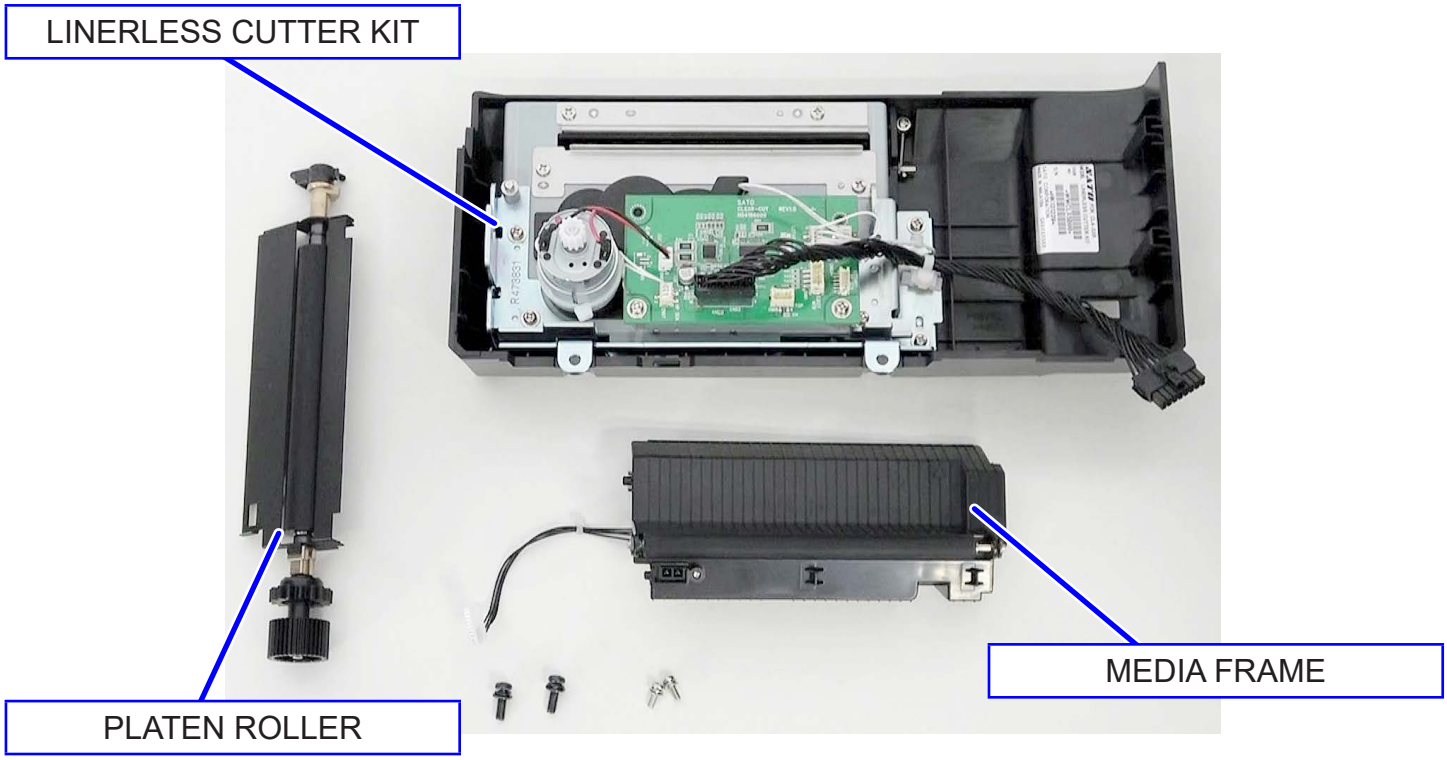

1 Remove the FRONT COVER R (①), FRONT COVER L (②) and the top sensor (③).

Refer to 5. 1 Removing the Front Covers (Standard) and Top Sensor

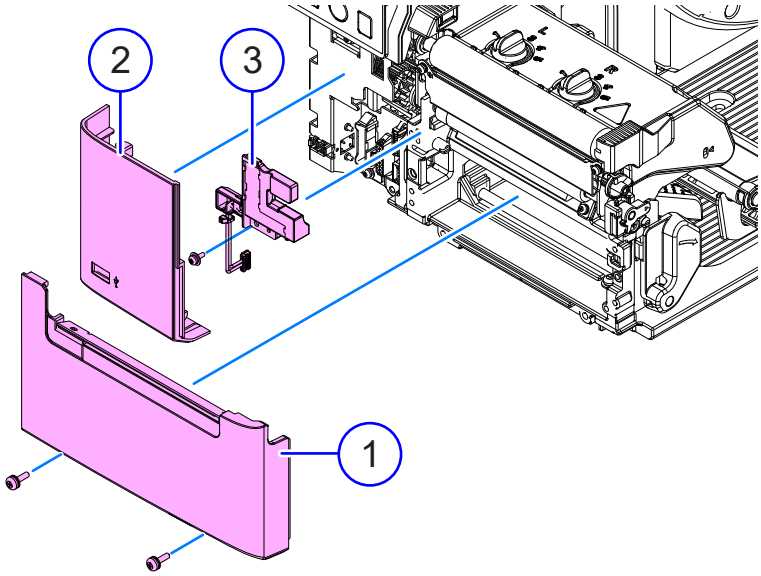

Parts to be discarded: FRONT COVER R (①) and two mounting screws, FRONT COVER L (②), top sensor (③) and one mounting screw

2 Remove the Platen Roller (④) .

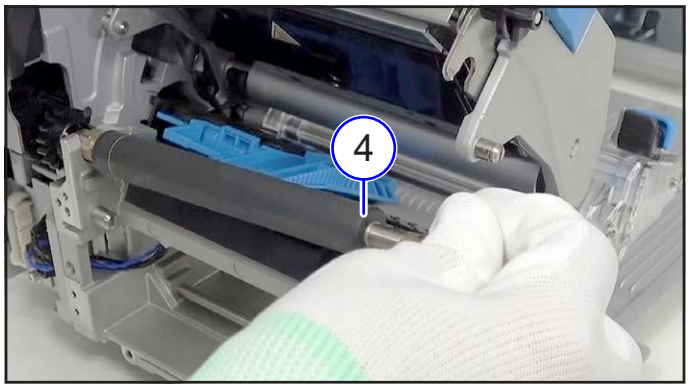

Parts to be discarded: Platen Roller (④)



3 Disconnect the cable (⑤) .

4 Remove two screws (S6) and remove the MEDIA GUARD ASSY (⑥) .

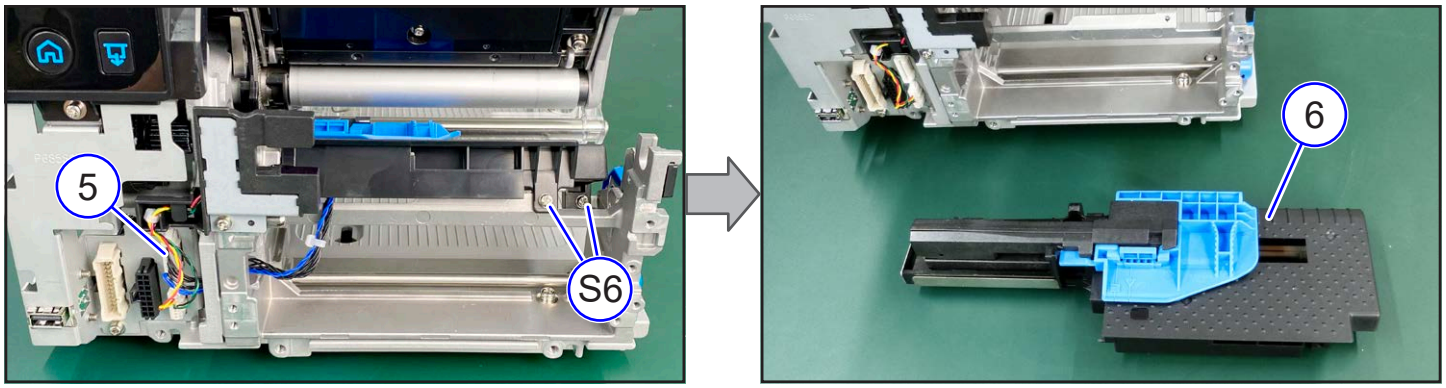

Parts to be discarded: MEDIA GUARD ASSY (⑥) and two mounting screws (S6)

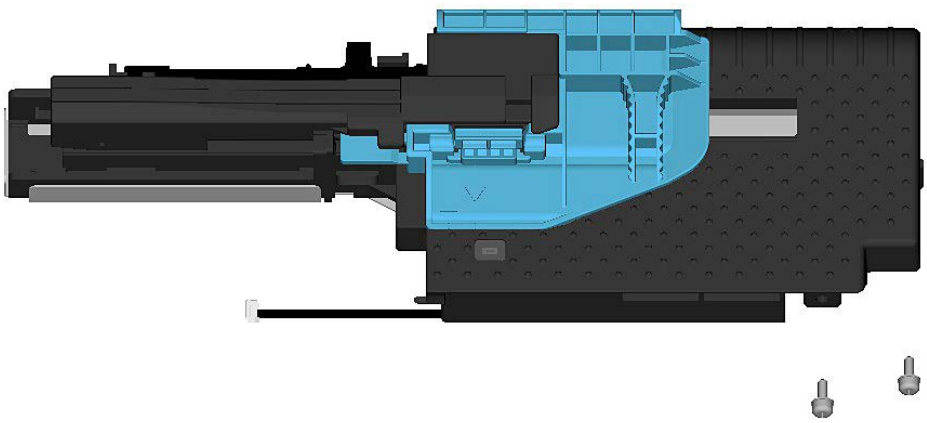

5 Remove one screw (S2) and remove the LABEL GUIDE LH (⑦) .

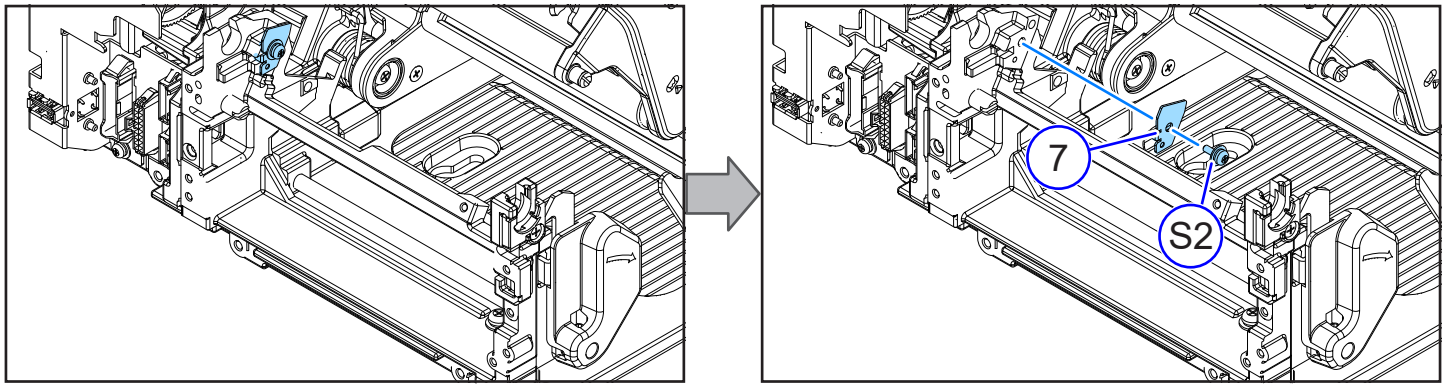

Parts to be discarded: LABEL GUIDE LH (⑦) and one mounting screw (S2)

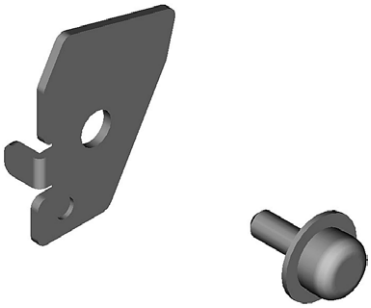

6 Attach the MEDIA FRAME (⑧) and fix it with two attached screws (⑨) .

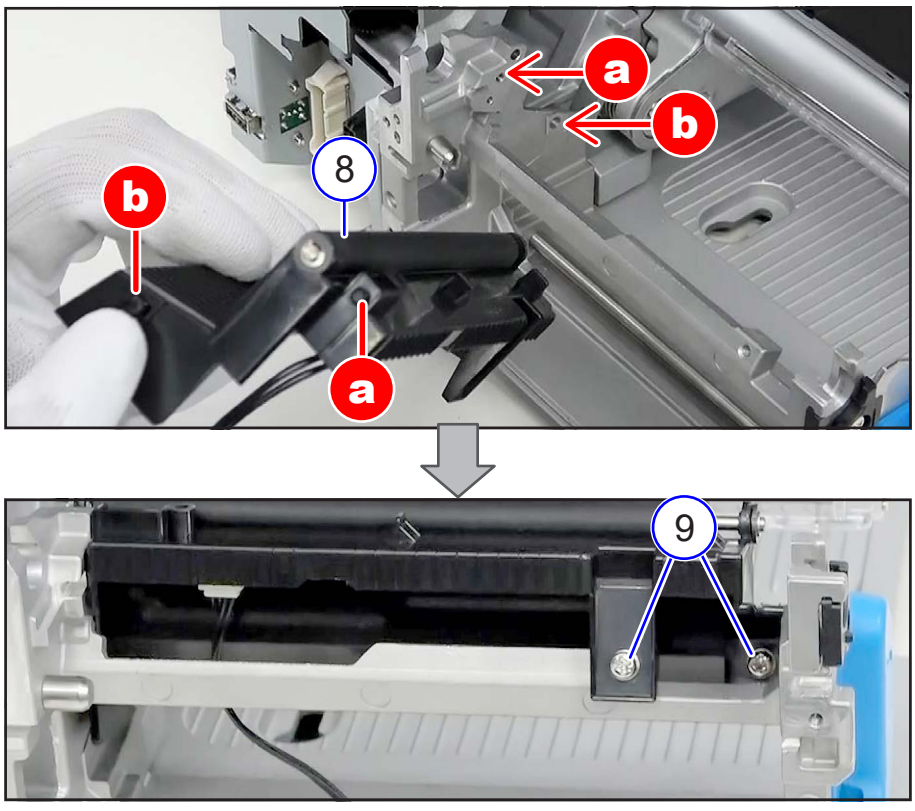

7 Pass the cable through the cable hole (⑩) and connect the connector (⑪).

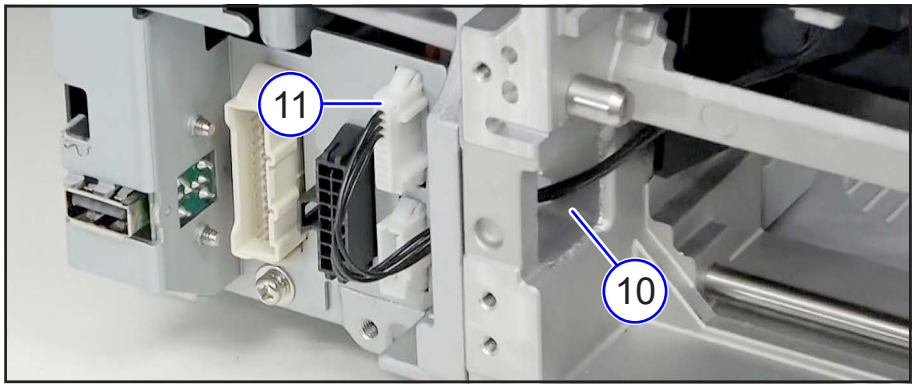

8 Attach the PLATEN ROLLER (⑫) .



9 Connect the connector (⑬) .

10 Attach the cutter unit (⑭⑮) and fix it with two attached screws (⑯) .

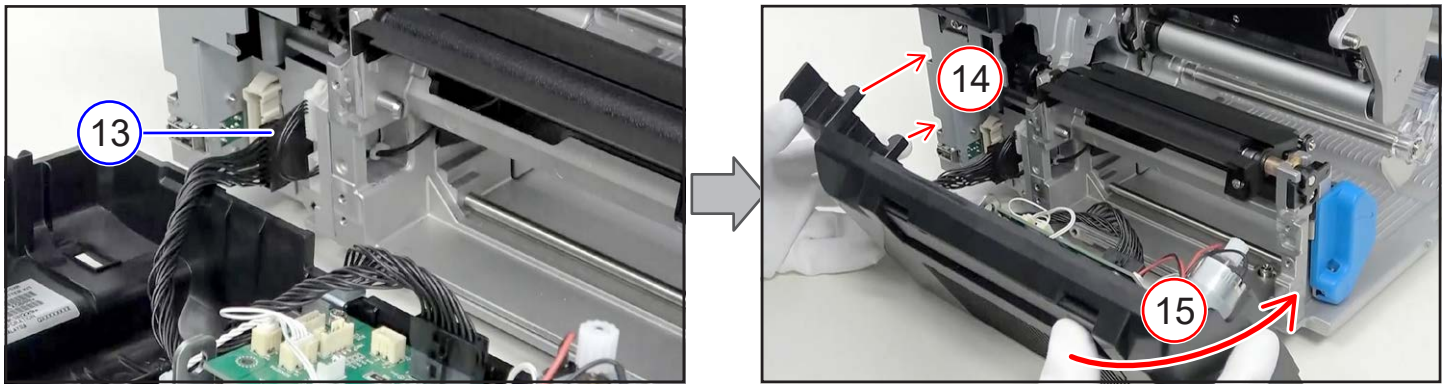

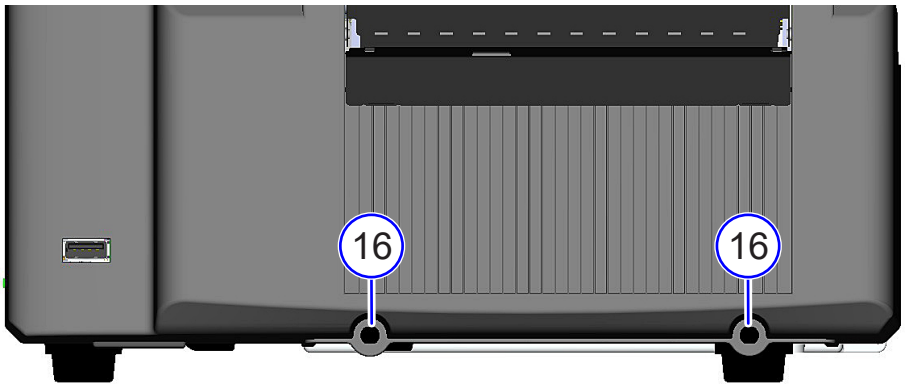

5. 5 Standard → Installing the DISPENSER KIT

DISPENSER KIT



LINER REWINDER KIT

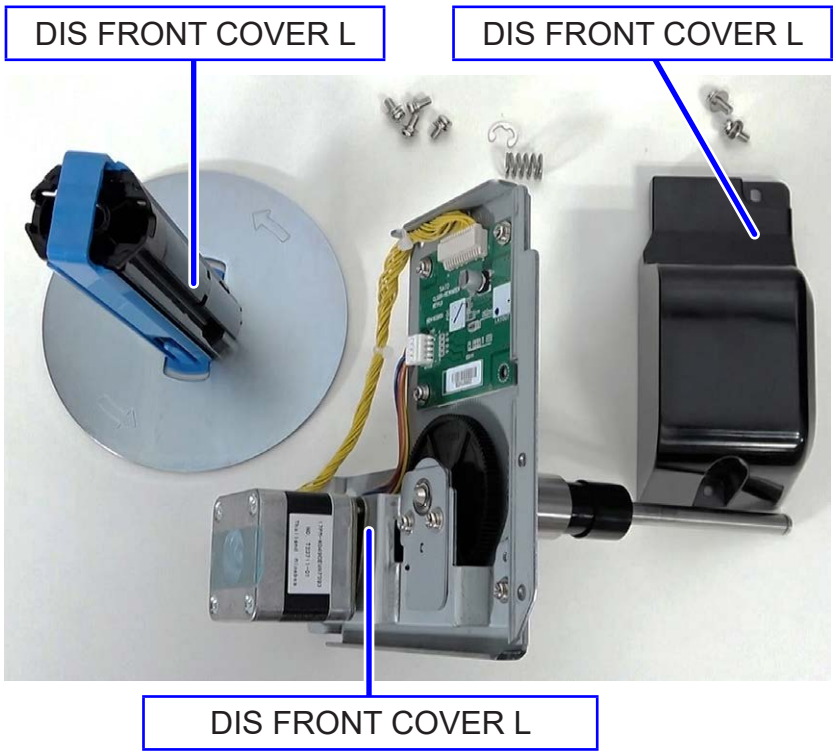

Peeled label externally ejecting	DISPENSER KIT
Peeled label internally winding	DISPENSER KIT + LINER REWINDER KIT

CAUTION

- For the DISPENSER KIT for internally winding, change the position of the GUIDE LOWER. The position of the fixing screws is different.

Peeled label externally ejecting

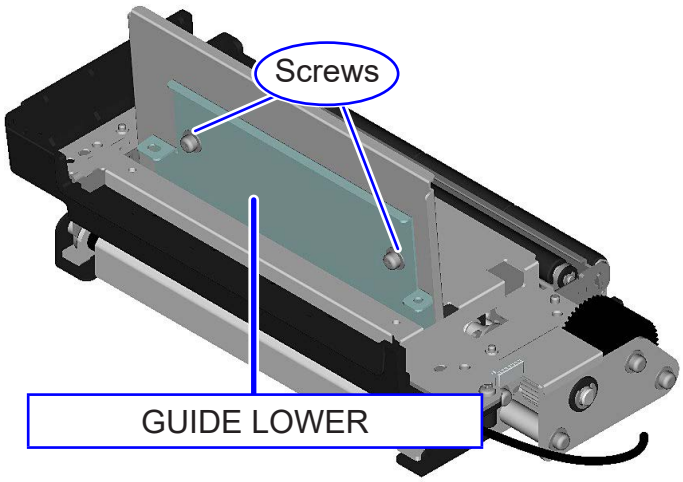

Peeled label internally winding

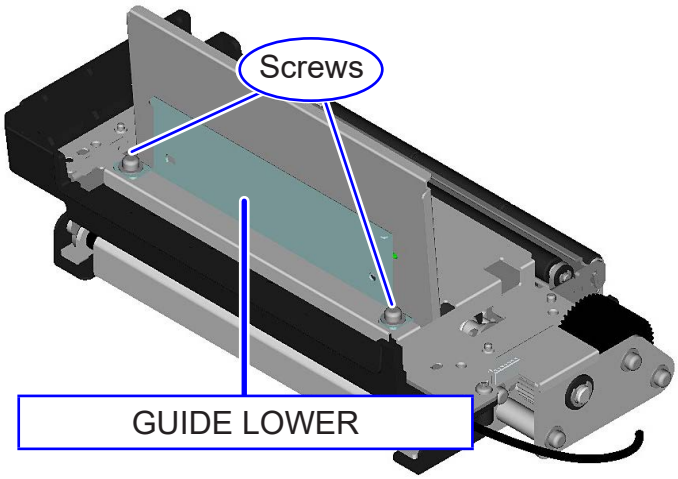

1 Remove the FRONT COVER R (①), FRONT COVER L (②) and the top sensor (③).

Refer to 5. 1 Removing the Front Covers (Standard) and Top Sensor

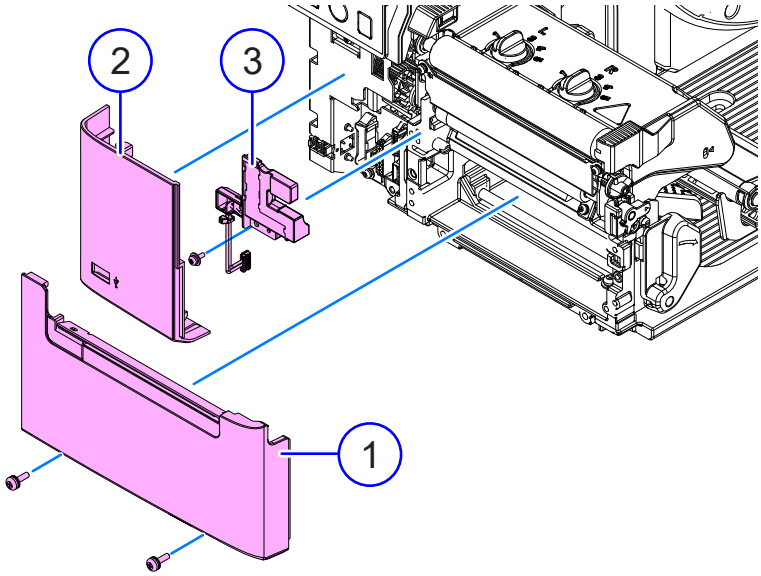

Parts to be discarded: FRONT COVER R (①) and two mounting screws, FRONT COVER L (②), top sensor (③) and one mounting screw

2 Connect the connector (④) and attach the DISPENSER KIT.

3 Pull the lever (⑤) of the DISPENSER KIT to open the open unit.

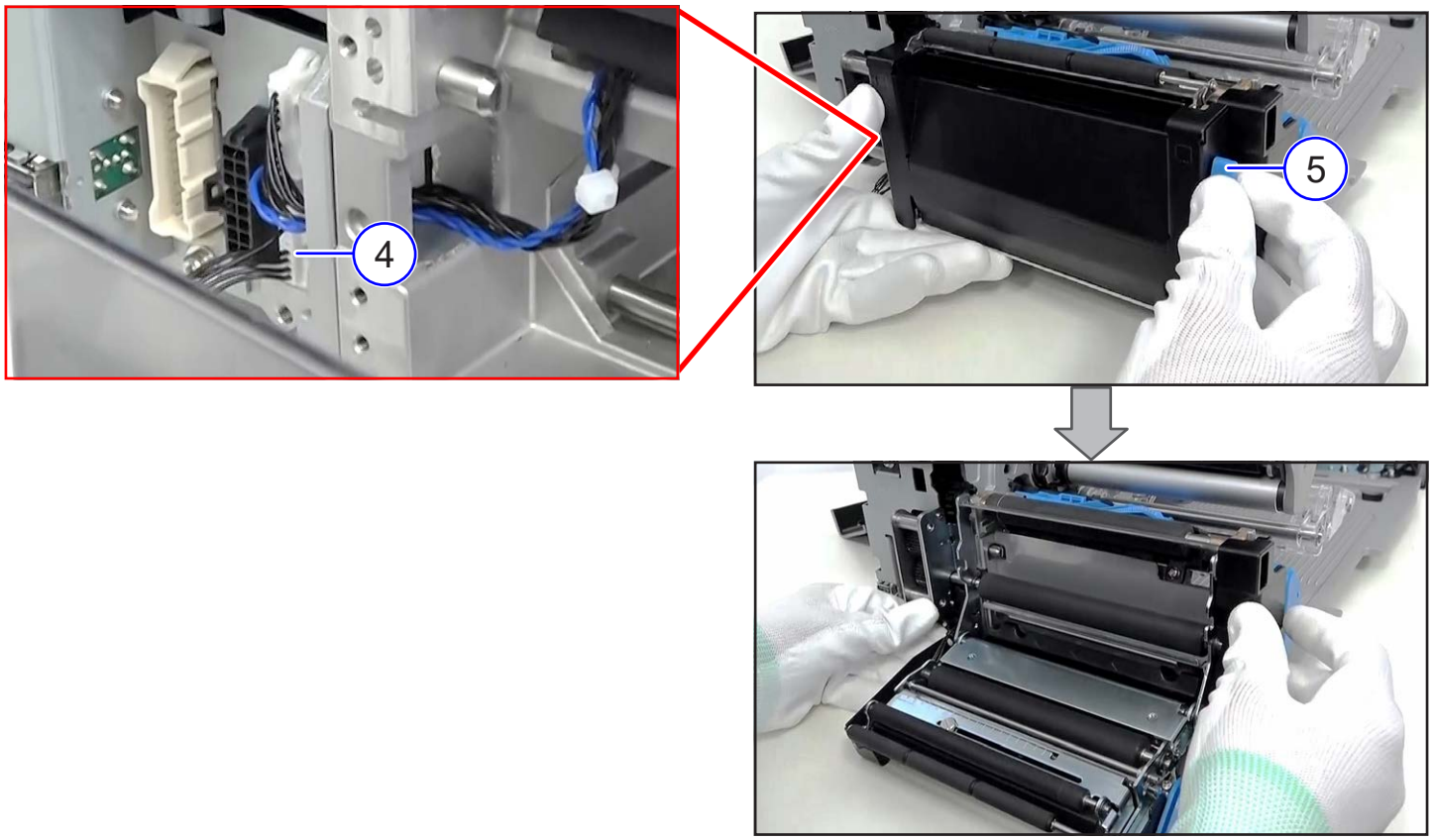

4 Fix it with four attached screws (⑥) .

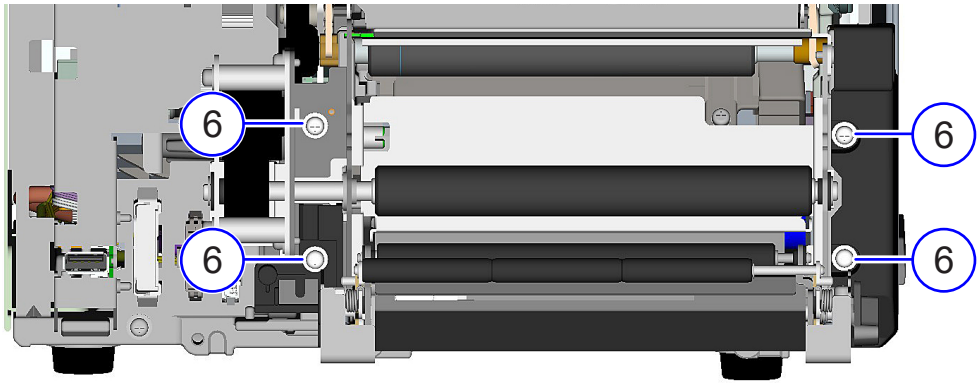

5 Attach the DIS FRONT COVER L (⑦) and fix it with one attached screw (⑧) .

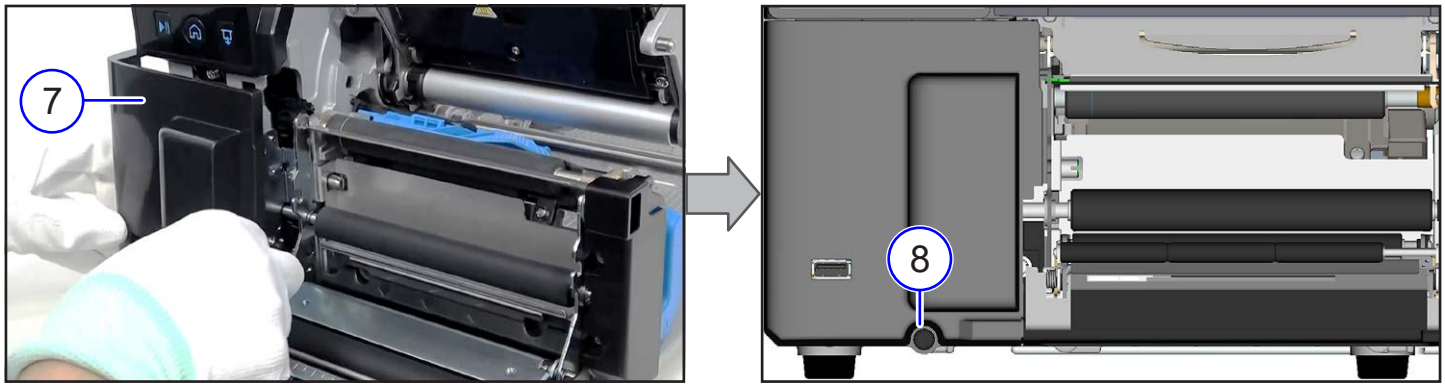

▶ From here, installing the LINER REWINDER KIT

1 Remove three screws (S2) and remove the LABEL GUIDE (HOLDER) L (①) .

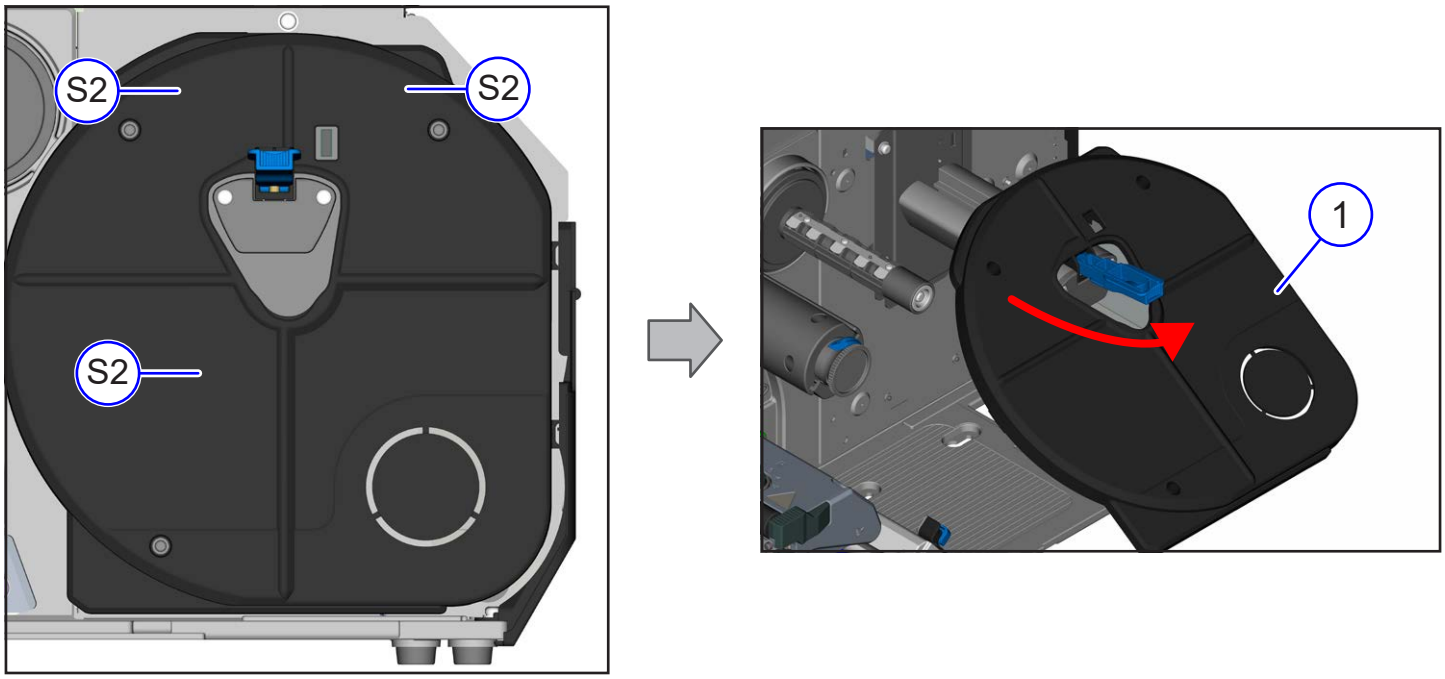

2 Cut three places with nippers to remove the circular part.

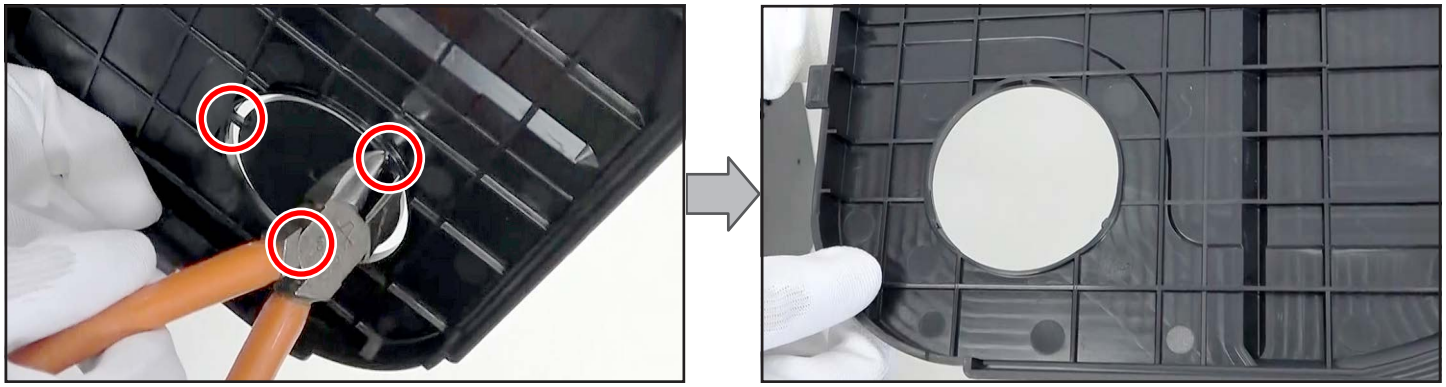

3 Remove one screw (S1) and remove the REWINDER BLIND COVER (②) .

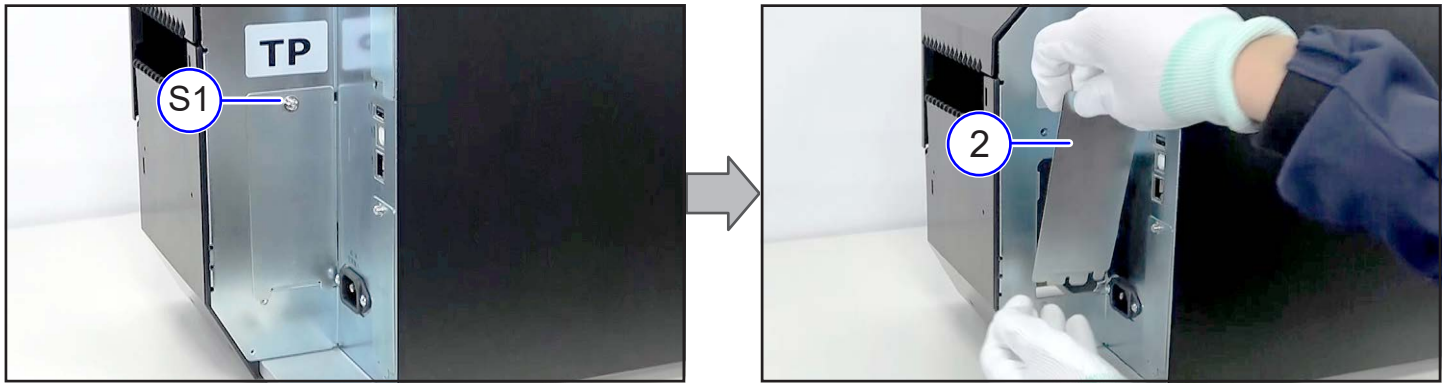

Parts to be discarded: REWINDER BLIND COVER (②) and one mounting screw (S1)

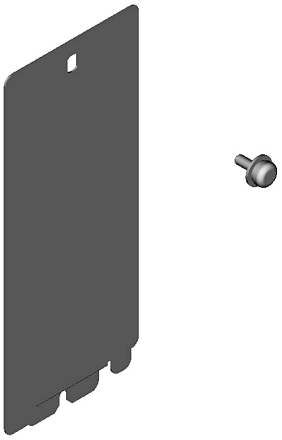

4 Peel off the protective tape (③) and connect the connector (④).

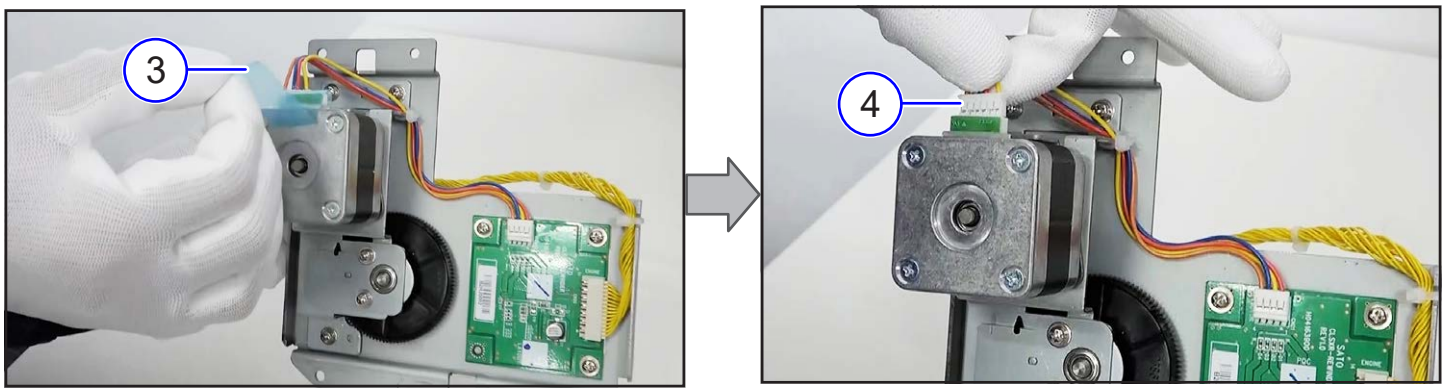

5 Attach the LINER REWINDER (⑤) and fix it with four attached screws (⑥) .

6 Connect the connector (⑦) .

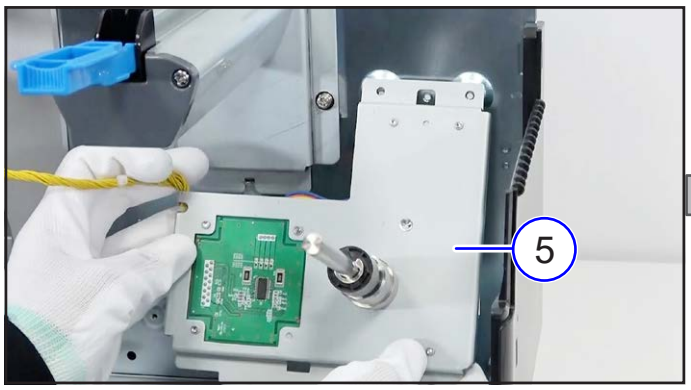

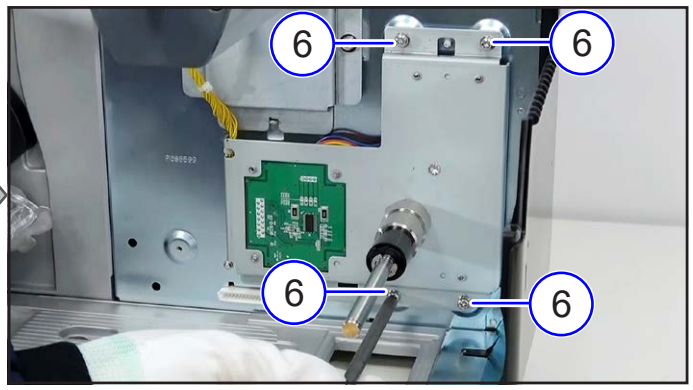

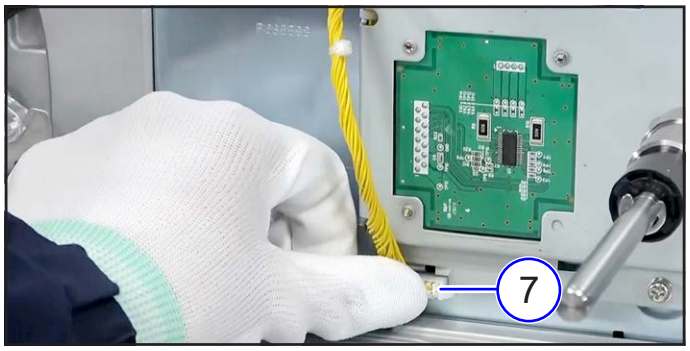

7 Attach the LABEL GUIDE (HOLDER) L (⑧) and fix it with three screws (S2) .

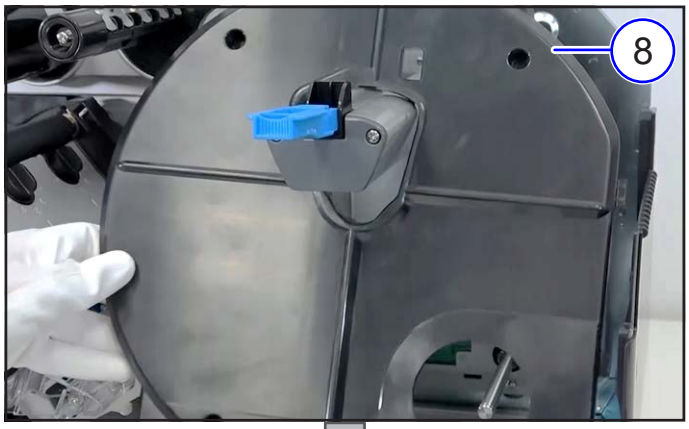

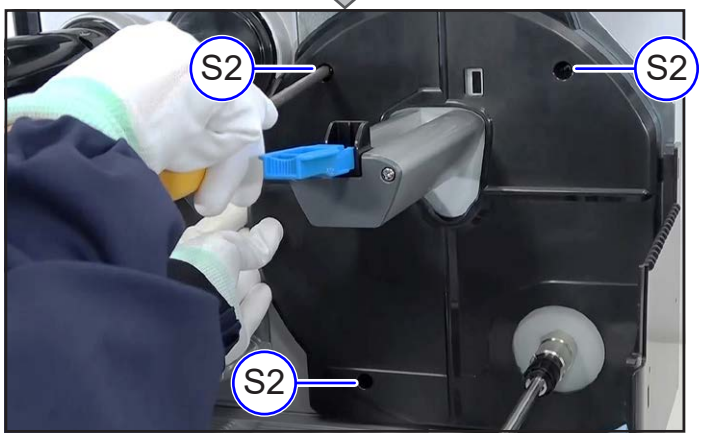

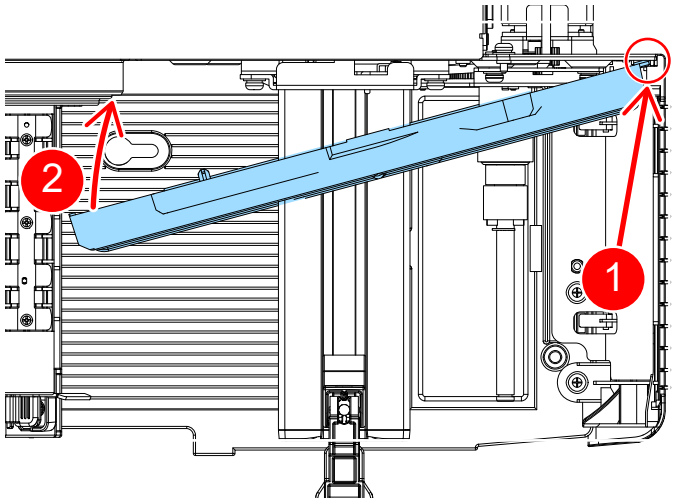

8 Attach the REWIND SP (⑨) .

9 Attach the REWINDER Unit (⑩) .

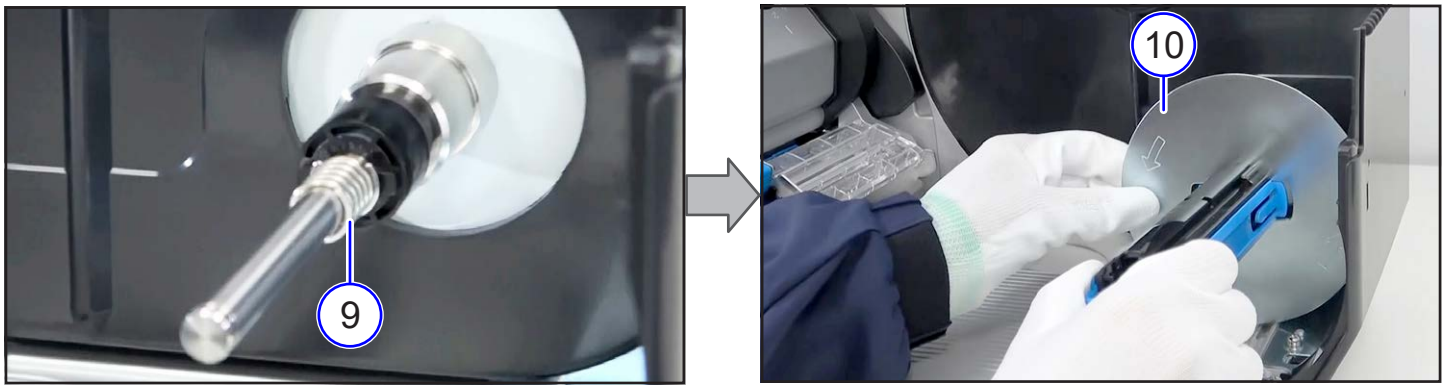

10 Extend the REWIND CORE (⑪) and fix the REWINDER Unit (⑩) with the E RING (⑫).

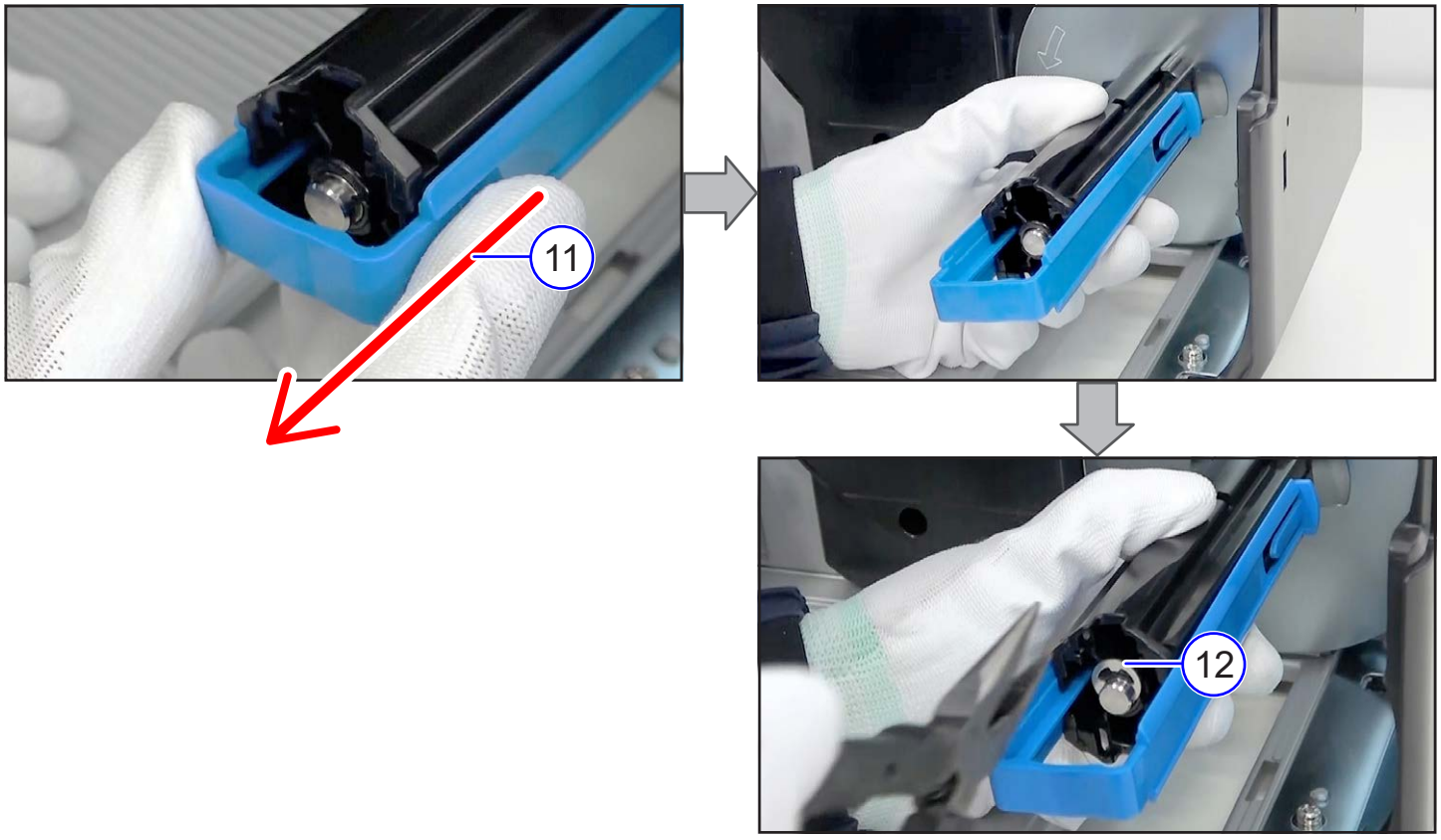

11 Attach the REW MOTOR COVER (⑬) and fix it with two attached screws (⑭) .

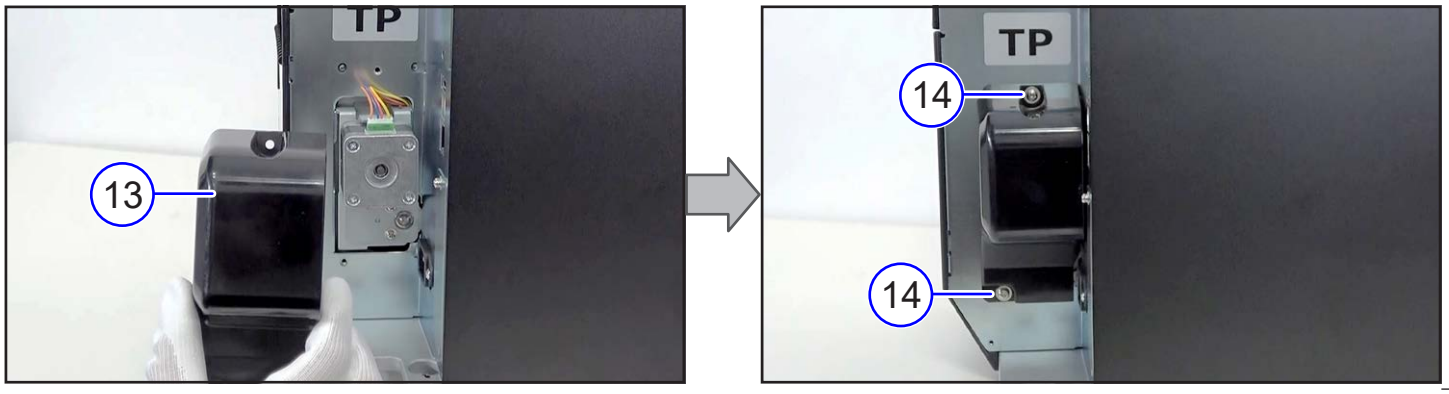

5. 6 Installing the WIRELESS KIT

WLAN/BLUETOOTH KIT	CELLULAR I/F KIT	WLAN/BLUETOOTH KIT and CELLULAR I/F KIT
		

▶ WLAN/BLUETOOTH and CELLULAR I/F KIT

Note
- Assemble the CELLULAR MODULE KIT in the WLAN/BLUETOOTH KIT.

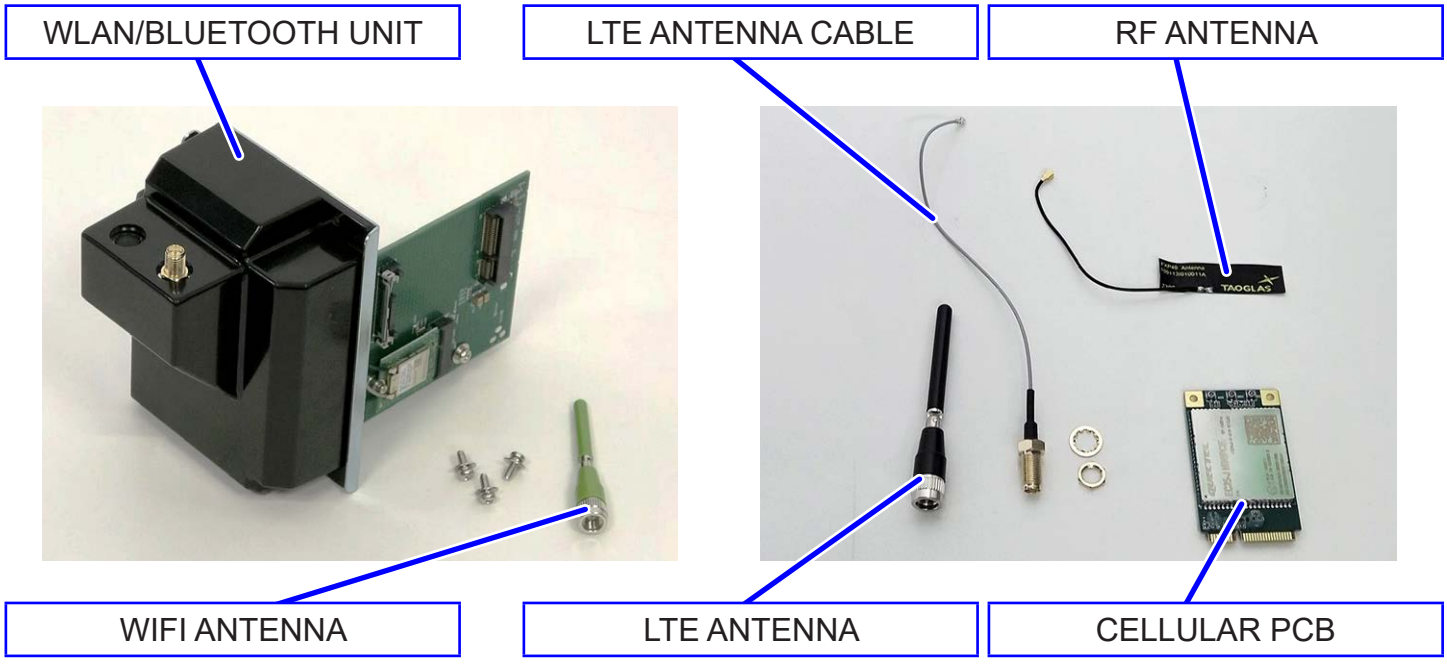

1 Remove two screws (①) and remove the ANTENNA BOX COVER (②) .

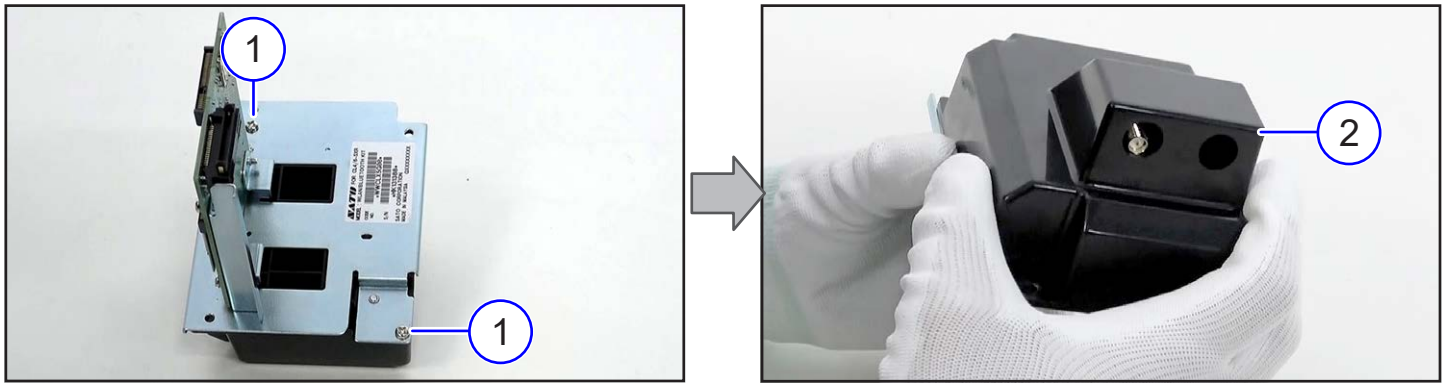

2 Remove the Cap (③) .



3 Attach the RF ANTENNA (④) and pass the coaxial cable through the cable hole (⑤).

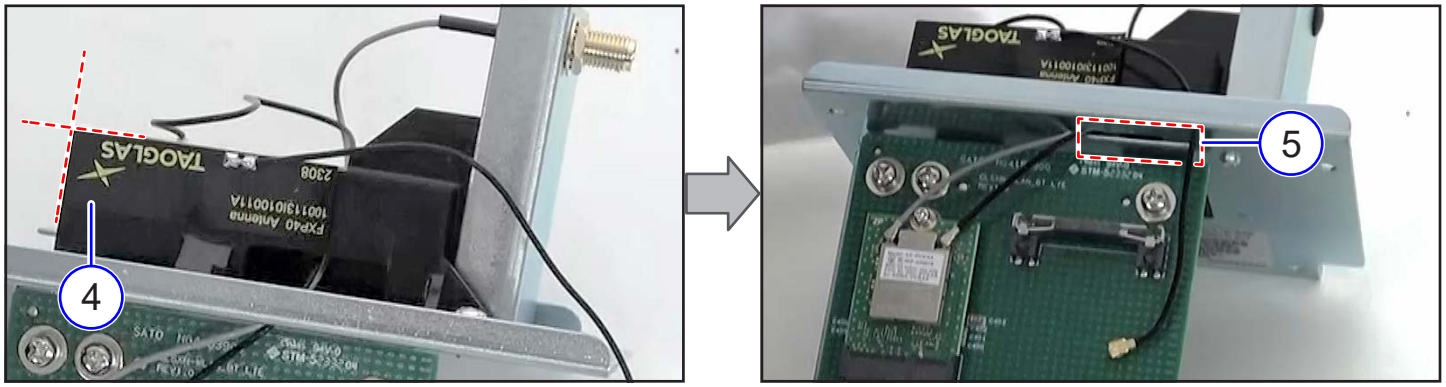

4 Attach the LTE ANTENNA CABLE (⑥) and fix it with the washer and nut.

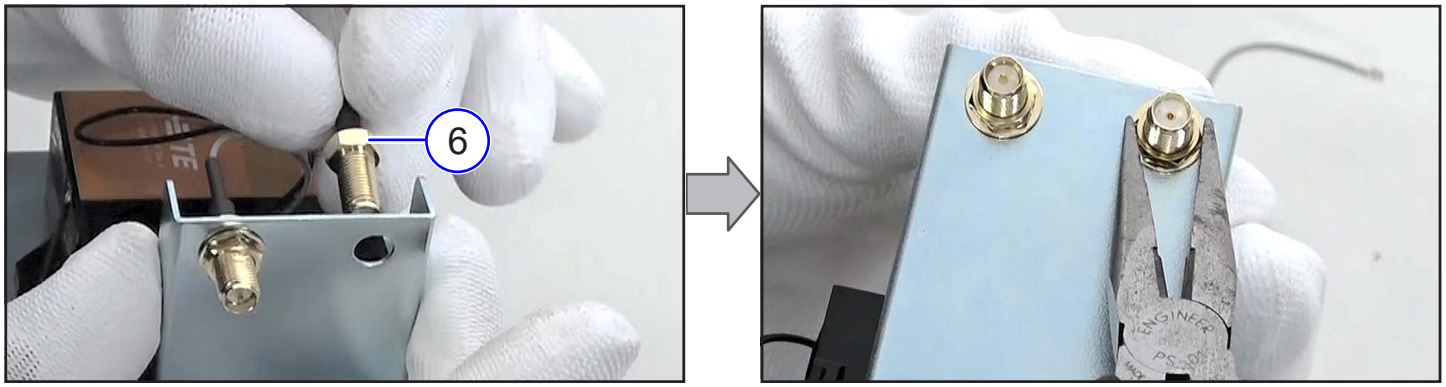

5 Pass the coaxial cables through the cable holes (⑦, ⑧).

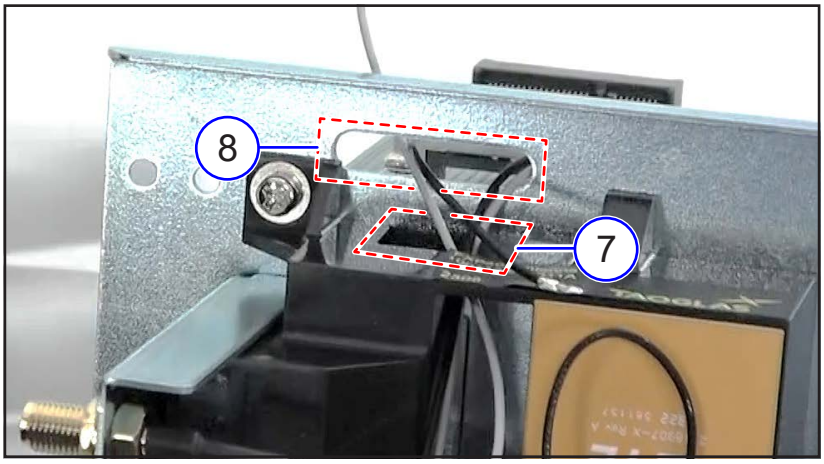

6 Attach the CELLULAR PCB (⑨) .

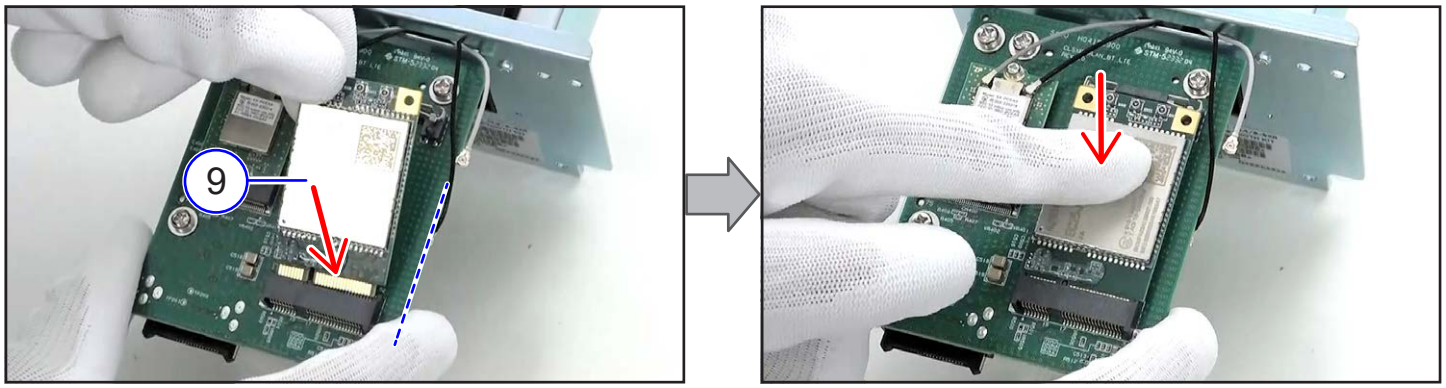

7 Connect the two coaxial cables while routing the left side.

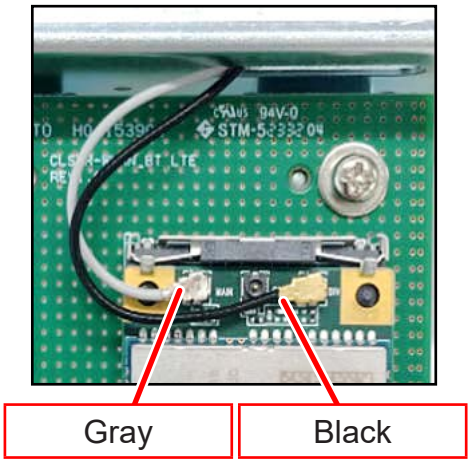

8 Attach the ANTENNA BOX COVER (⑩) and fix it with two screws (⑪) .

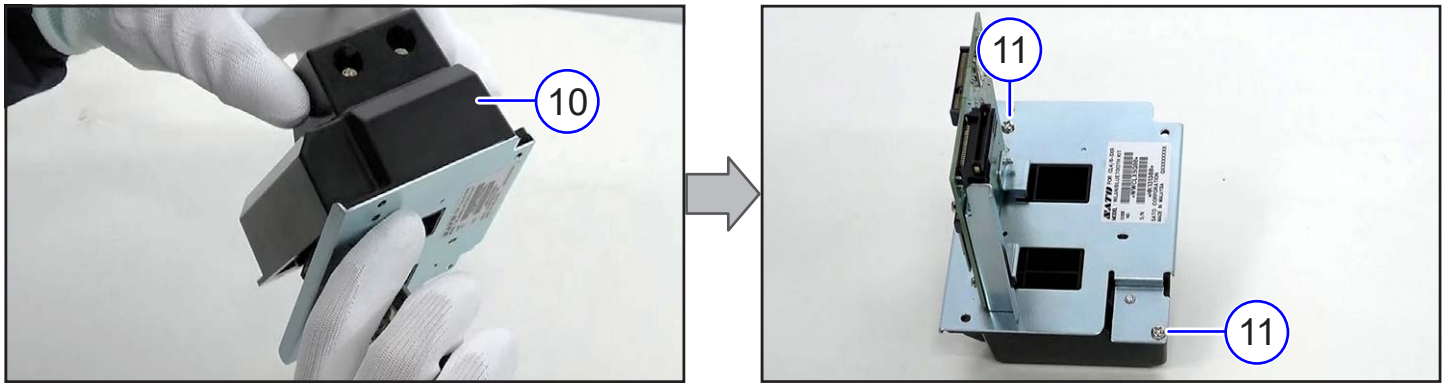

▶ From here, common procedure for each kit

9 Remove one screw (S2) and remove the WIRELES IF BLIND COVER (⑫) .



Parts to be discarded: WIRELES IF BLIND COVER (⑫) and one mounting screw (S2)

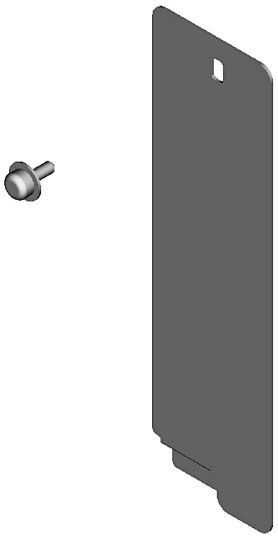

10 Attach the Wireless Kit.
Make sure to fully insert it.

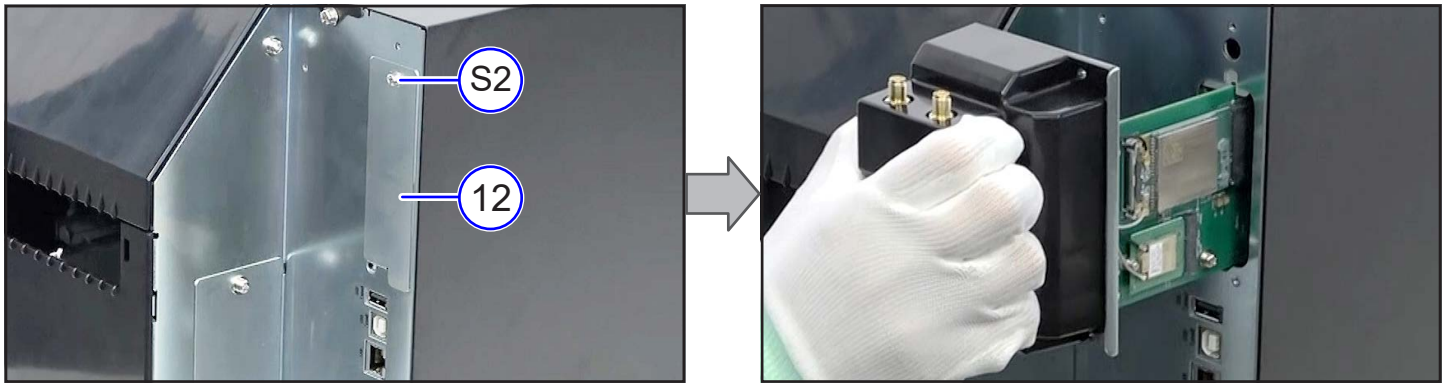

11 Fix it with three attached screws (⑬) .

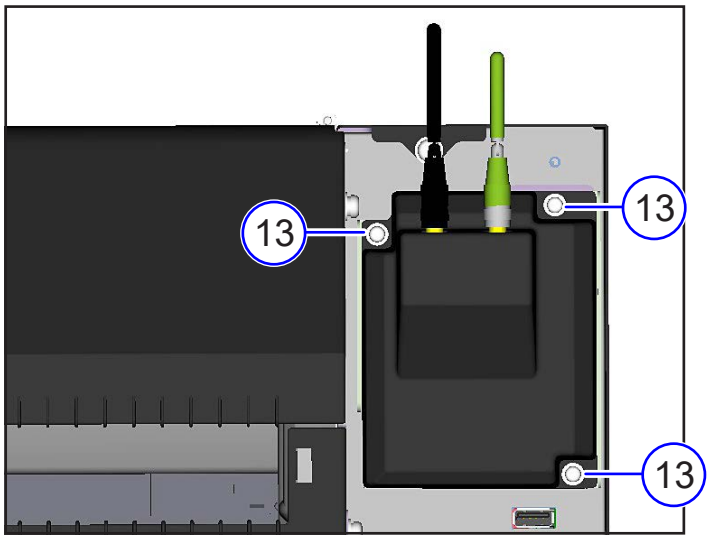

5. 7 Installing the RS232C/EXT KIT

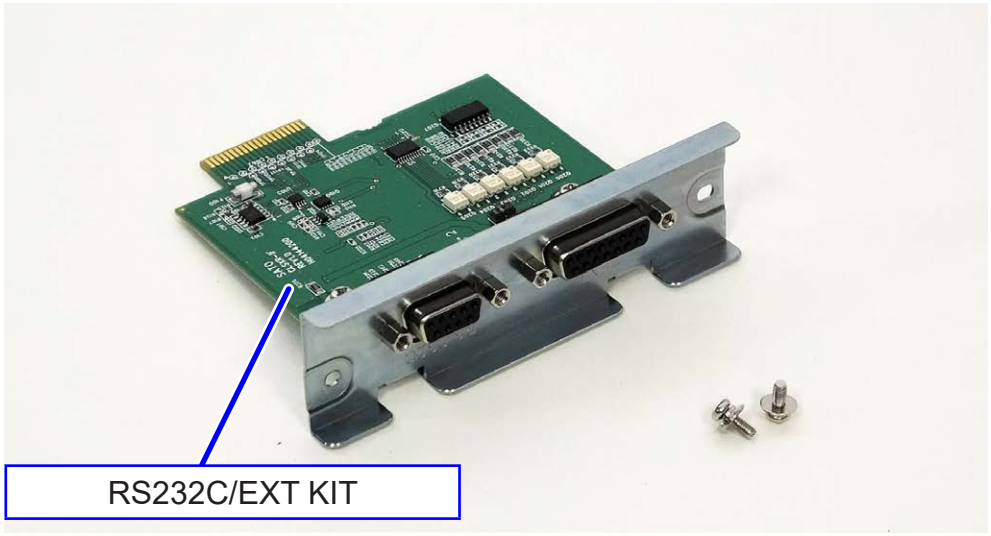

1 Remove one screw (S2) and remove the WIRELES IF BLIND COVER (①) .

2 Attach the RS232C/EXT KIT (②) .
Make sure to fully insert it.

3 Fix it with two attached screws (③) .

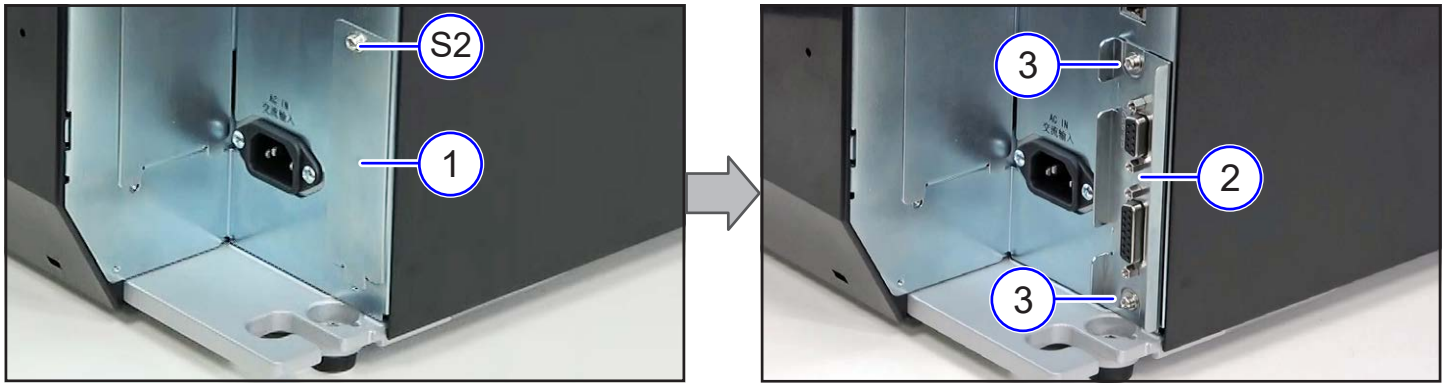

Parts to be discarded: WIRELES IF BLIND COVER (⑫) and one mounting screw (S2)

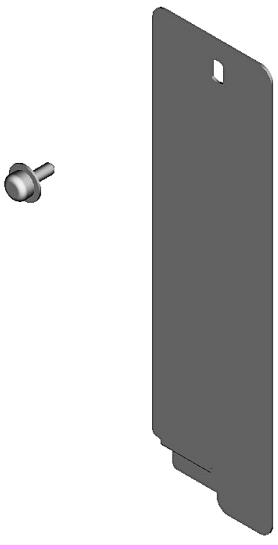

5. 8 Installing the φ265mm HOLDER KIT



1 Remove three screws (S2) and remove the LABEL GUIDE (HOLDER) L (①) .

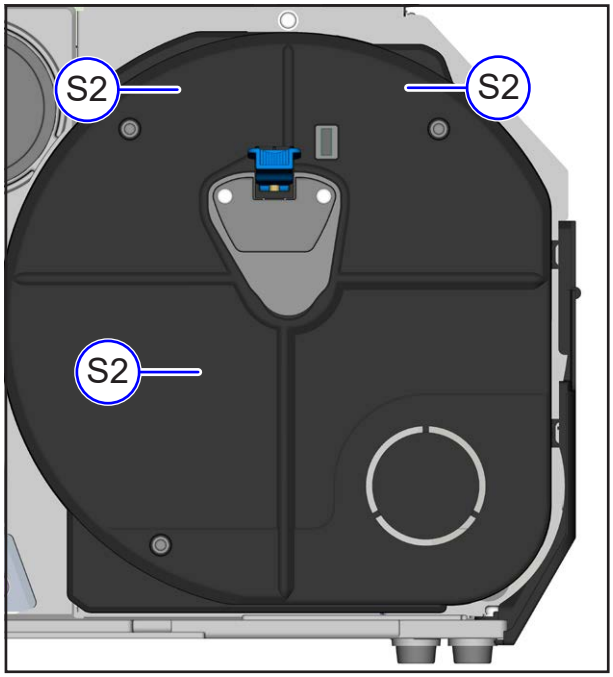

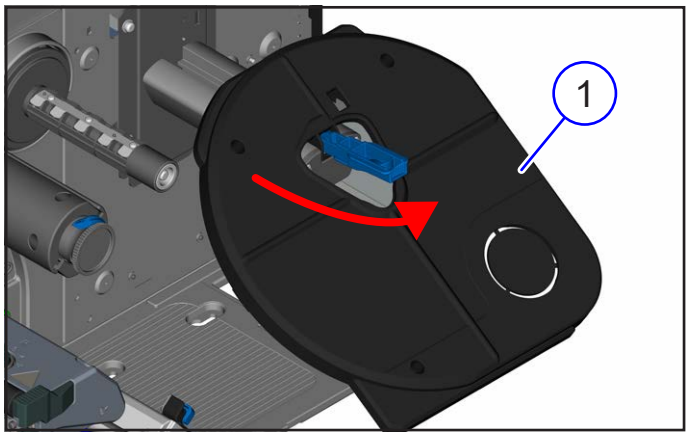

Notes on assembling

- First, engage the convex parts of the LABEL GUIDE (HOLDER) L with the concave parts of the frame.

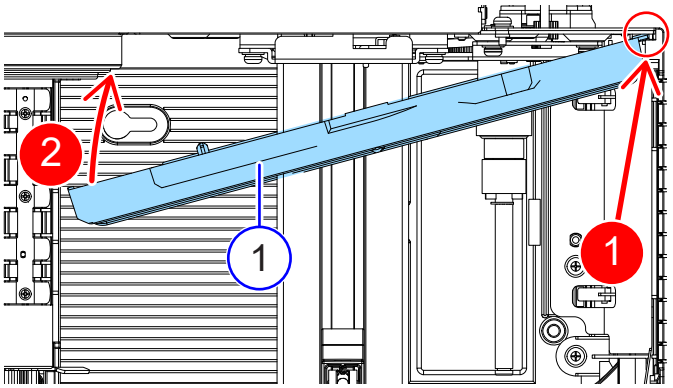

2 Remove four screws (S1) and remove the LABEL HOLDER ASSY (②) .

3 Disconnect one connector (③) .

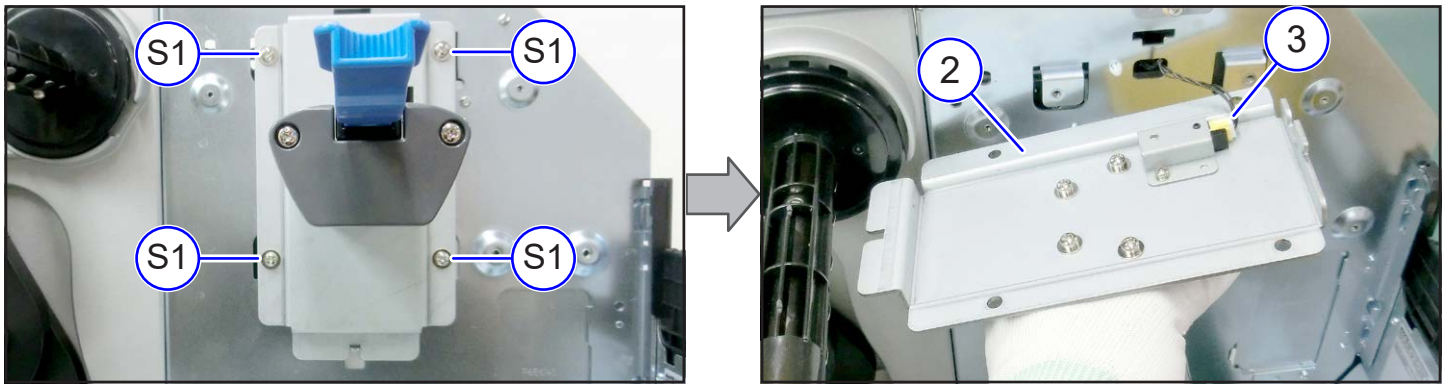

4 Remove two screws (S7) and remove the Label Near End Sensor (④) .

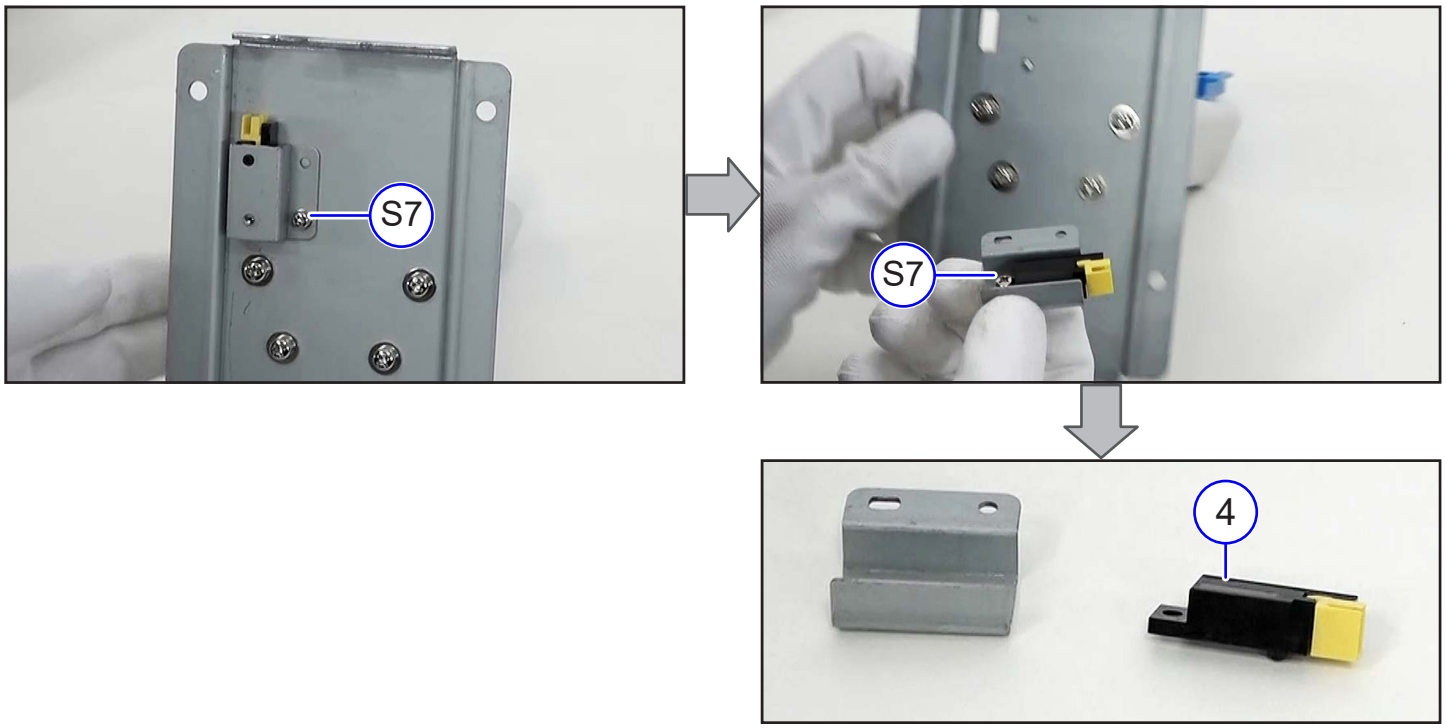

Parts to be discarded: LABEL HOLDER ASSY (②) with the Label Near End Sensor (④) removed and six mounting screws

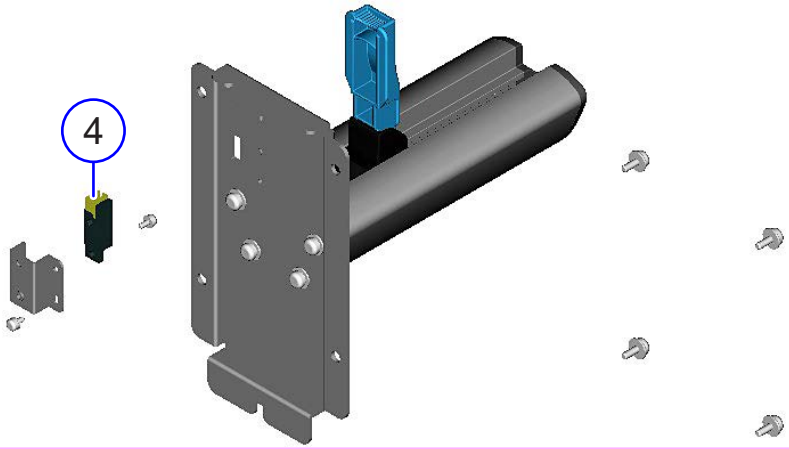

5 Remove three screws (⑤) of the φ 265 mm HOLDER KIT and remove the LABEL HOLDER BRACKET (⑥).

6 Remove one screw (⑦) and remove the LABEL SENSOR BRACKET (⑧) .

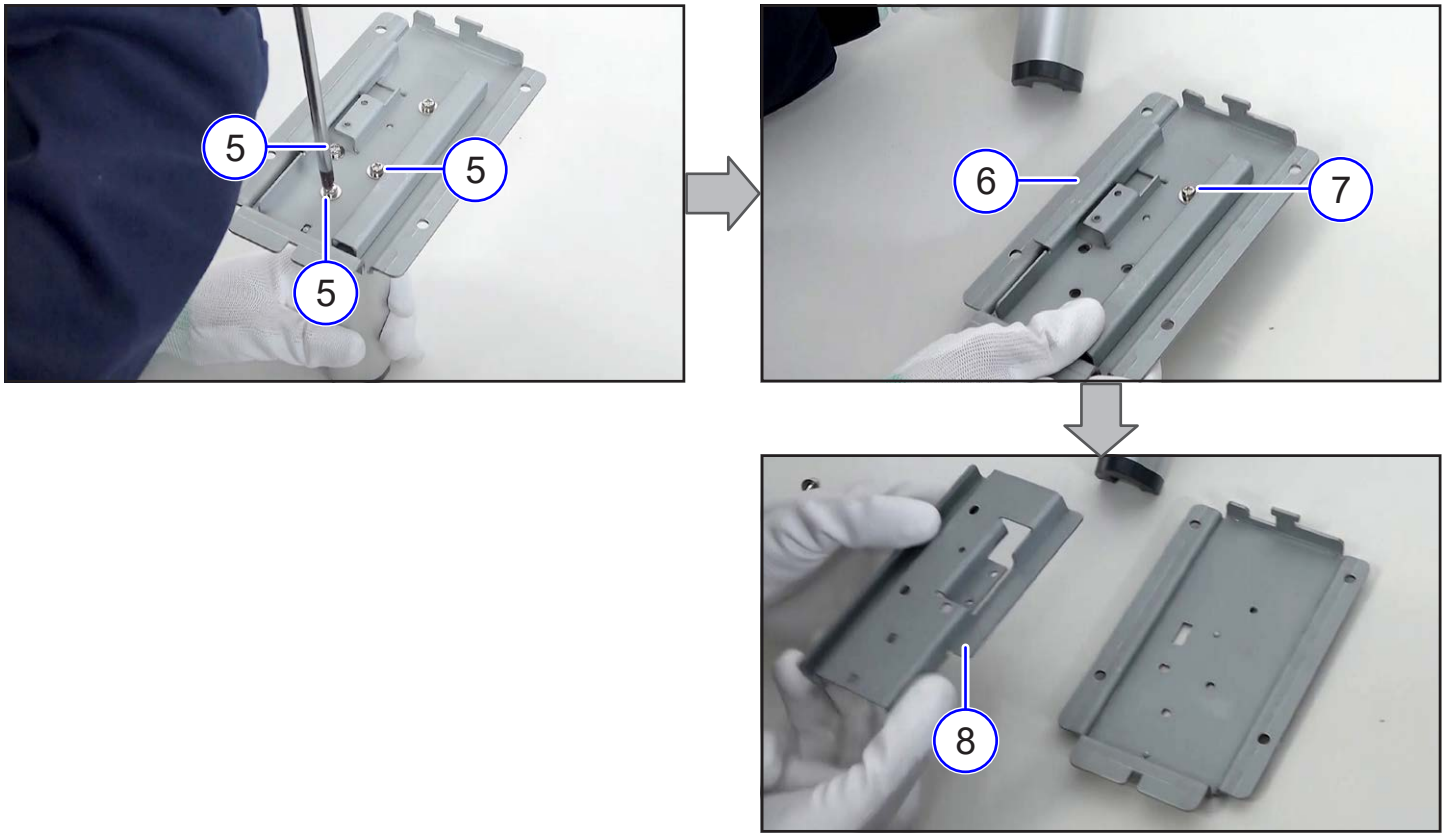

7 Attach the label near-end detection sensor (⑨) to the LABEL SENSOR BRACKET (⑩) and fix it with one screw (S7).

8 Attach the LABEL SENSOR BRACKET (⑩) to the LABEL HOLDER BRACKET (⑪) and fix it with one screw (⑫).

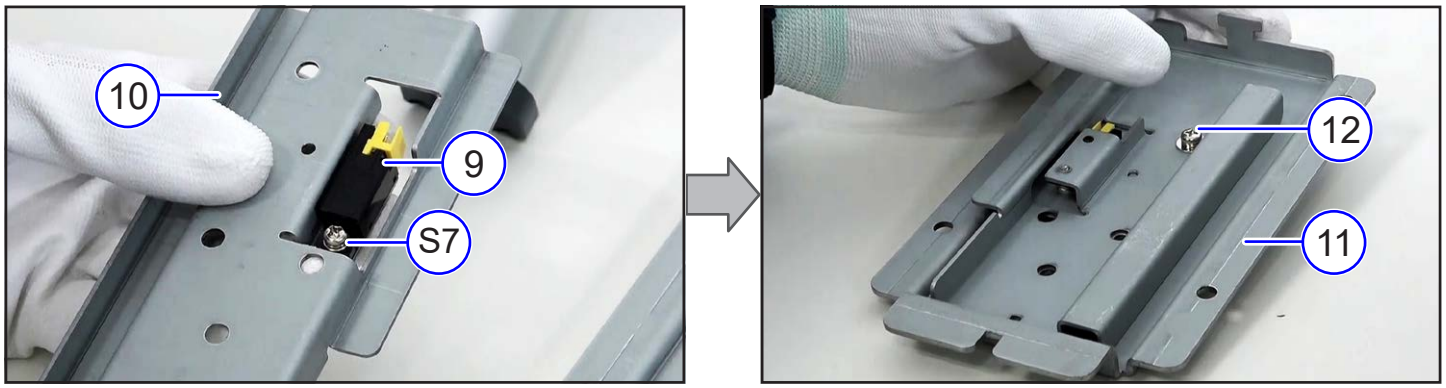

9 Attach the LABEL HOLDER BRACKET (⑬) to the LABEL HOLDER (⑭) and fix it with three screws (⑮).

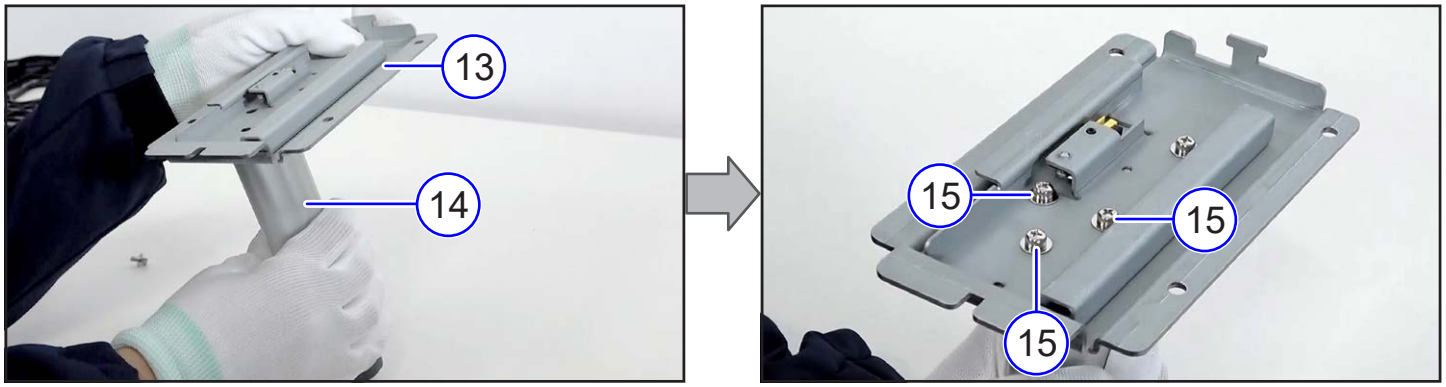

10 Connect the connector (⑯) and attach the φ265mm HOLDER KIT.

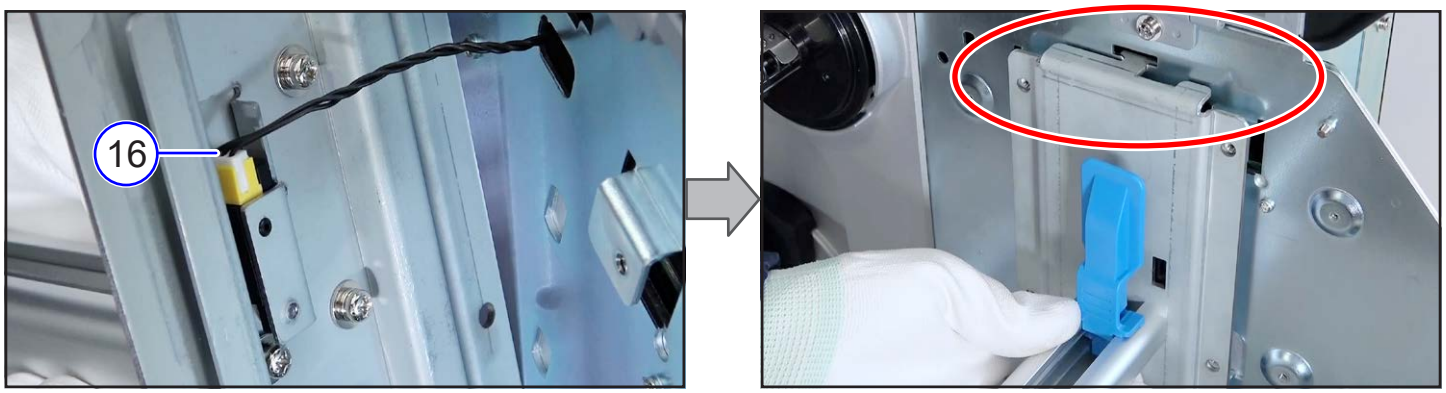

11 Fix it with four screws (S1) .

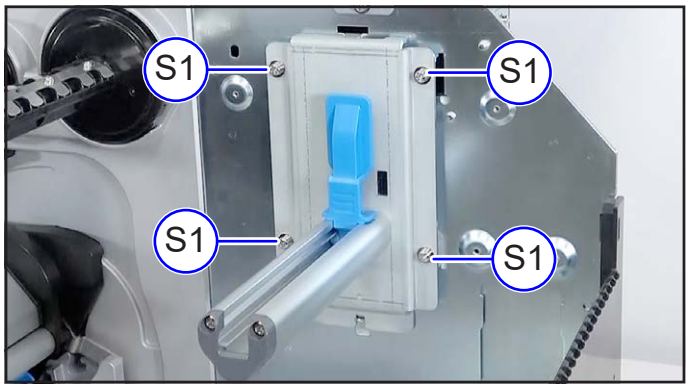

12 Attach the LABEL GUIDE (HOLDER) L (⑰) and fix it with three screws (S2) .

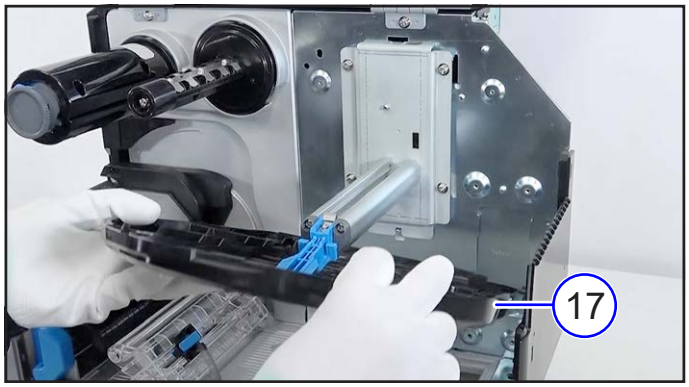

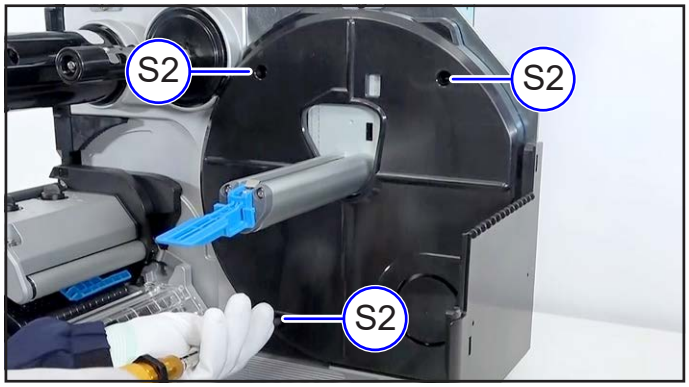

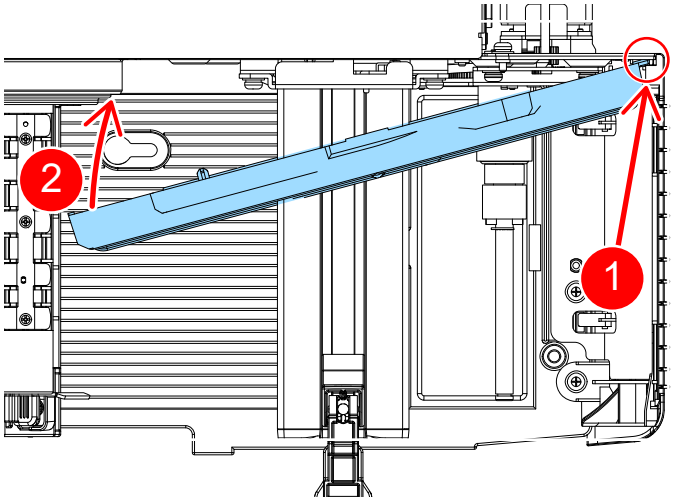

5. 9 Installing the RFID KIT

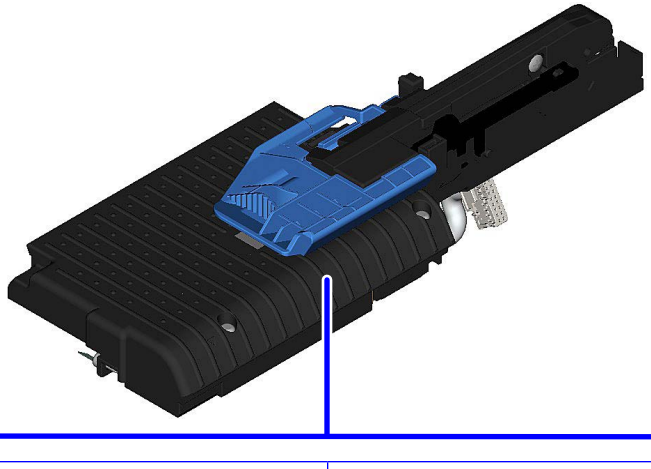

UHF RFID KIT	HF RFID KIT
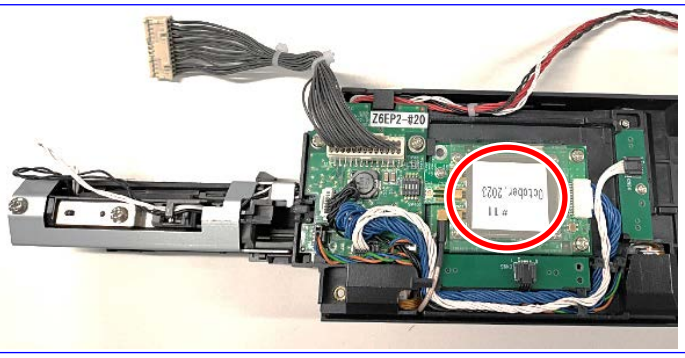	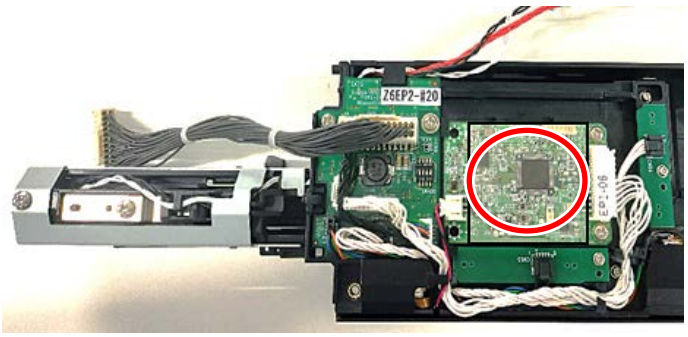
HEAD COVER RFID	
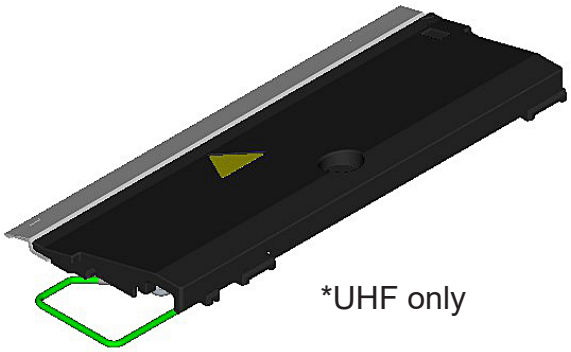 *UHF only	

1 Remove the FRONT COVER R (①), FRONT COVER L (②), and the top sensor (③).

Refer to 5. 1 Removing the Front Covers (Standard) and Top Sensor

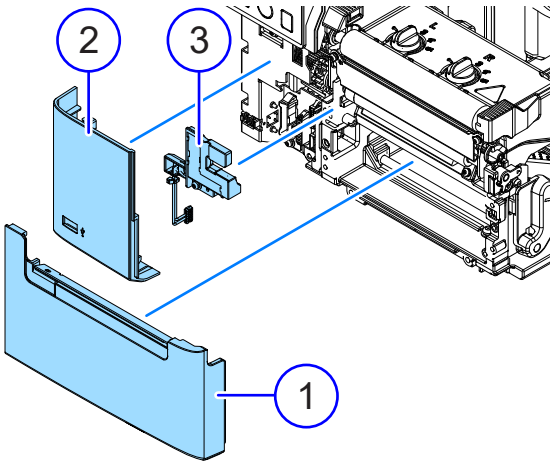

2 Remove the Platen Roller (④) .

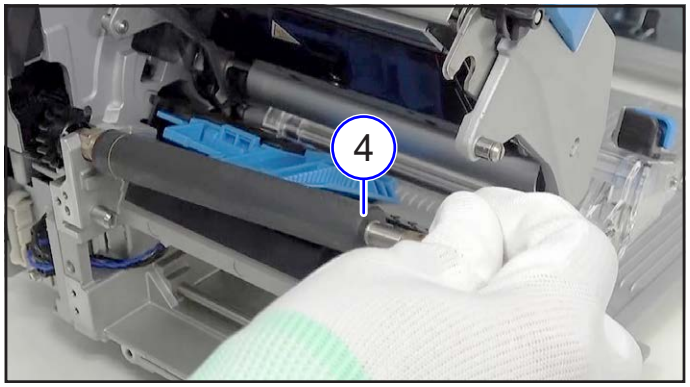

3 Disconnect the cable (⑤) .

4 Remove two screws (S6) and remove the MEDIA GUARD ASSY.

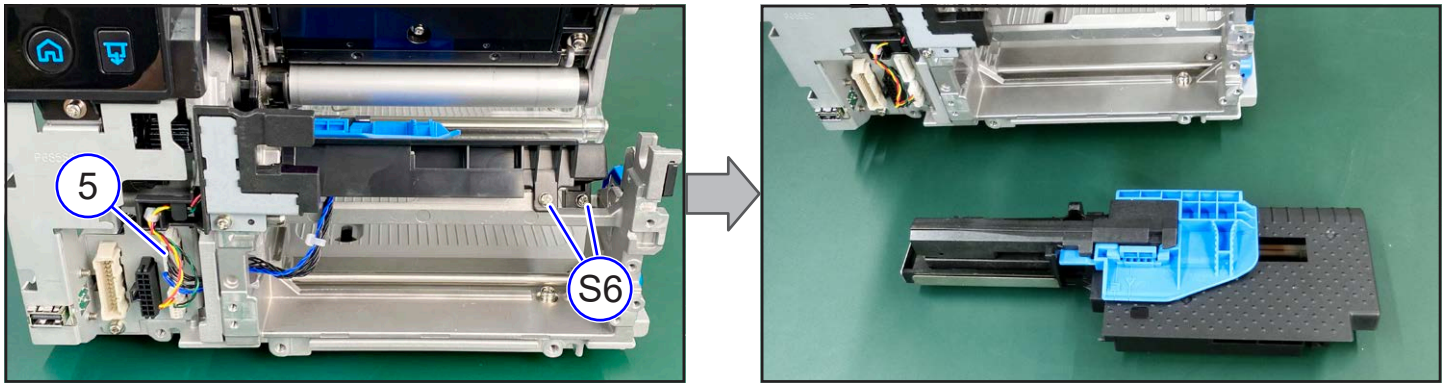

Parts to be discarded: MEDIA GUARD ASSY and two mounting screws (S6)

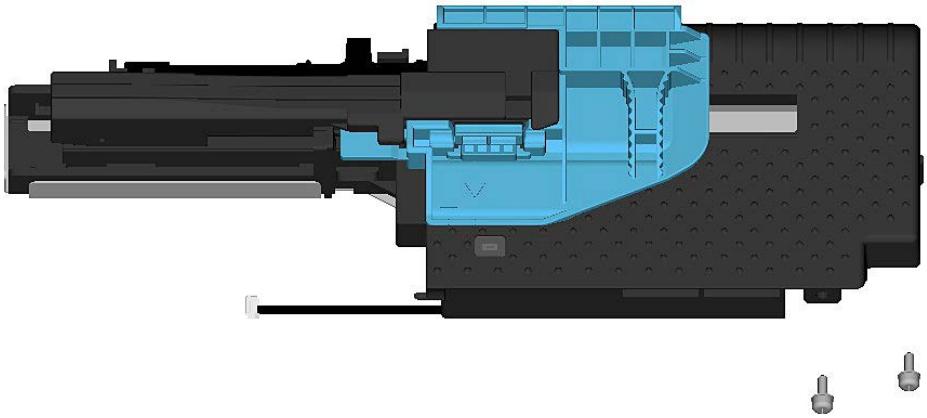

- For the HF type, since there is no need to remove the HEAD COVER, proceed to step 27 Installing the RFID KIT.

5 Remove the Print head (Thermal head) (⑥) .

Refer to 4.3.1 Replacing the Print Head (Thermal Head)

6 Remove two screws (S6) and remove the RIBBON ADJ PLATE (⑦) .



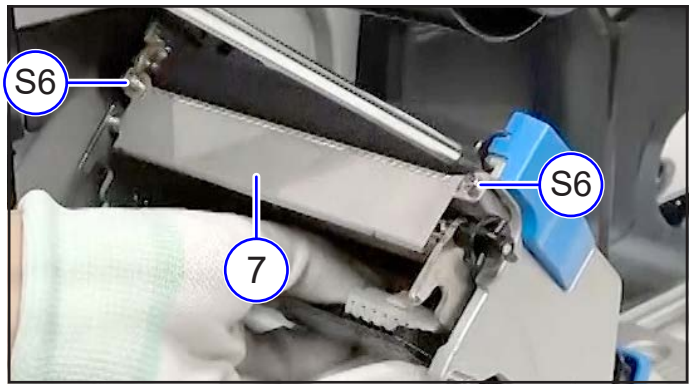

7 Remove one screw (S2) and remove the HEAD COVER (⑧) .
* The standard head cover is not required.

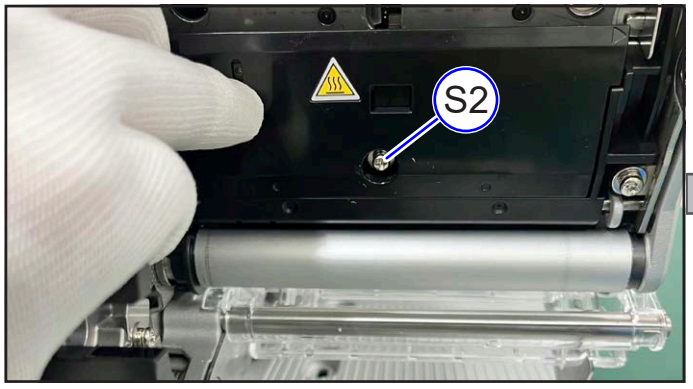

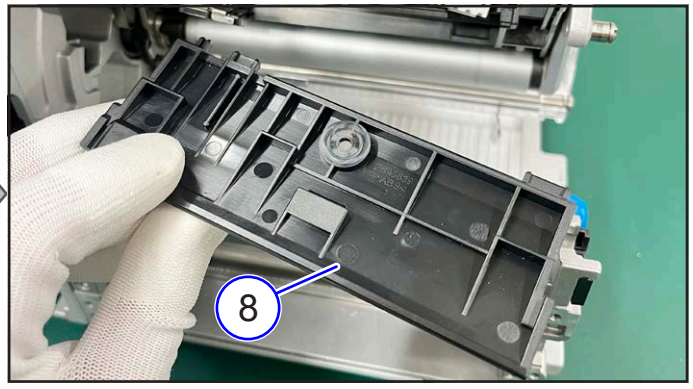

Parts to be discarded: HEAD COVER (⑧) and one mounting screw (S2)

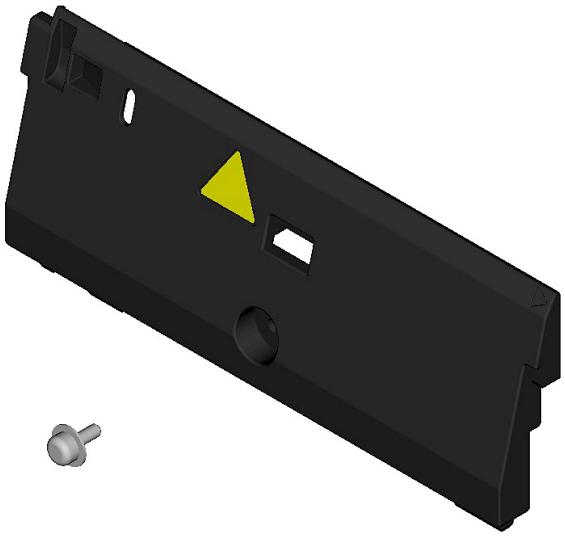

8 Disconnect the connector (⑨) and remove the GAP2 D ASSY.

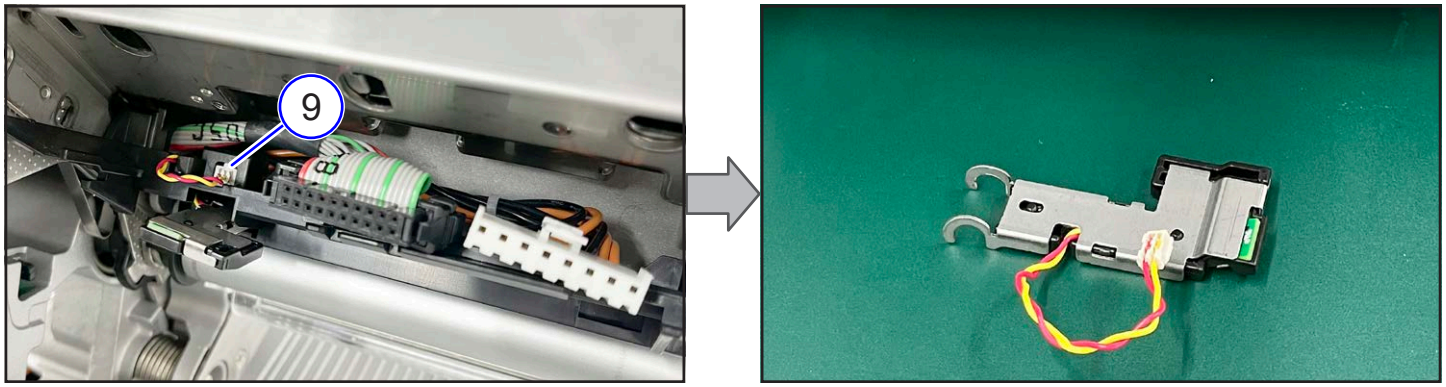

Parts to be discarded: GAP2 D ASSY (⑨)

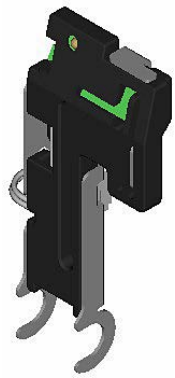

9 Release hook (⑩) and remove the RIBBON ROLLER ADJ COVER (⑪) .

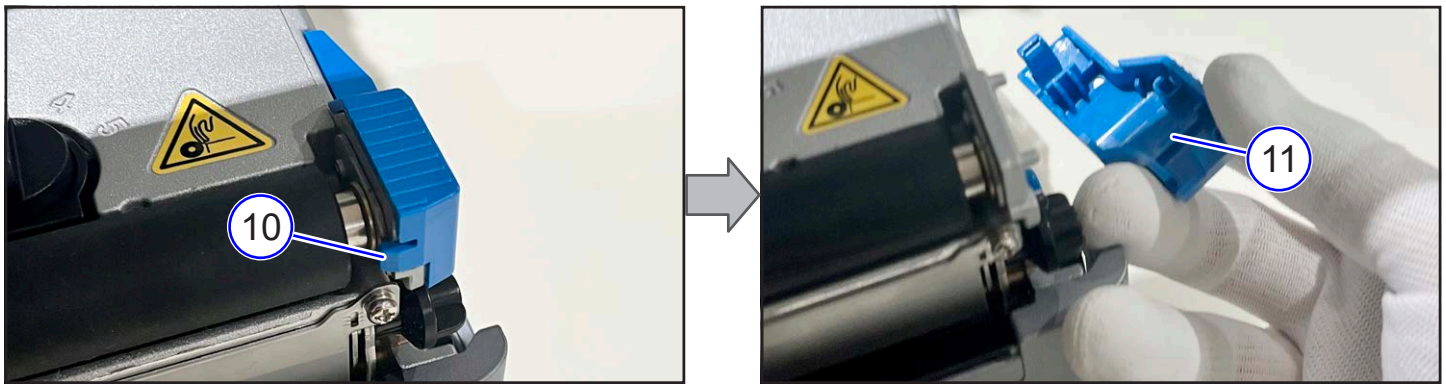

10 Remove two screws (S1) and remove the HEAD FRAME R (⑫) .

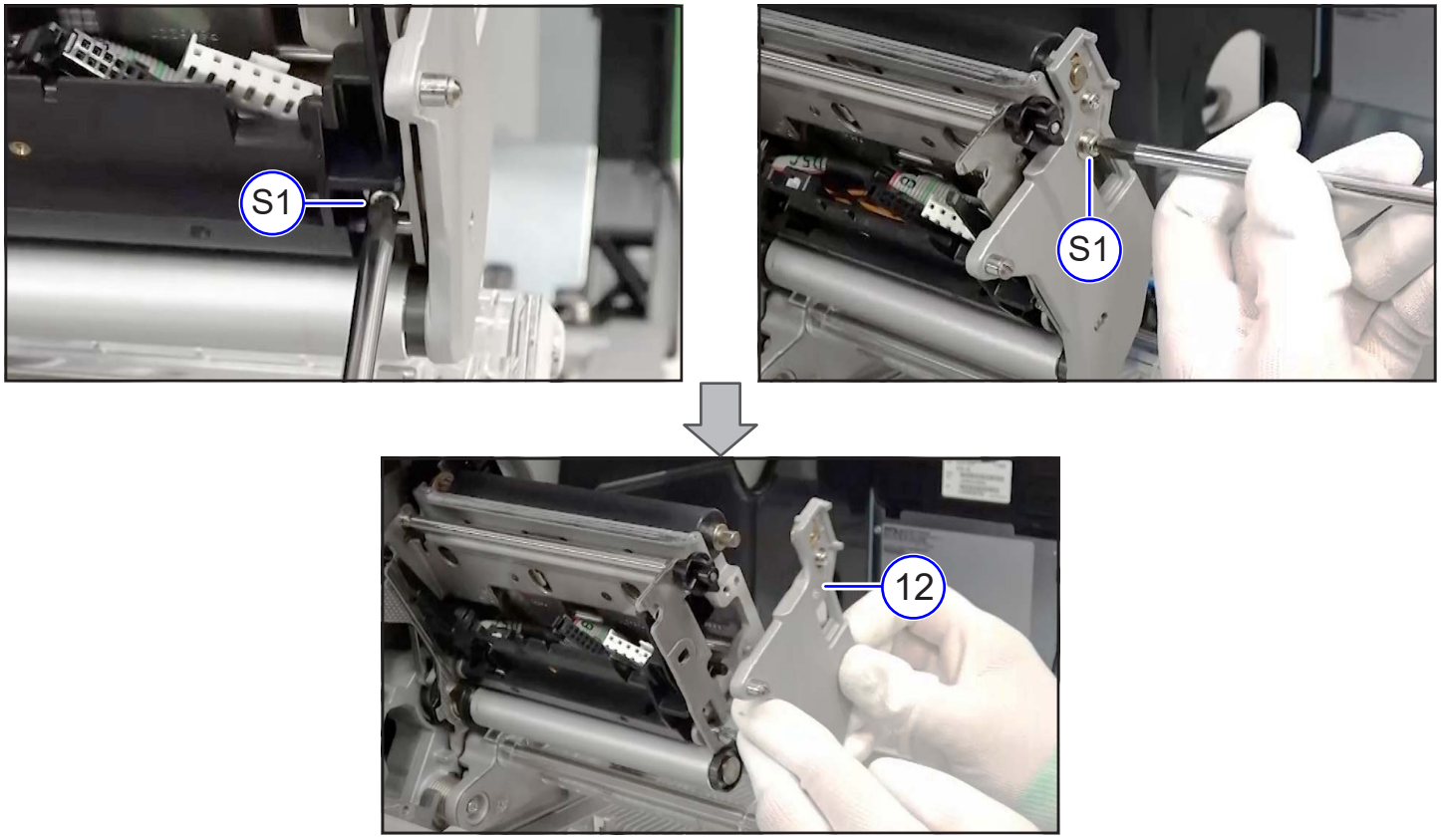

11 Come off the HEAD BASE from the pin (⑬) and open it.

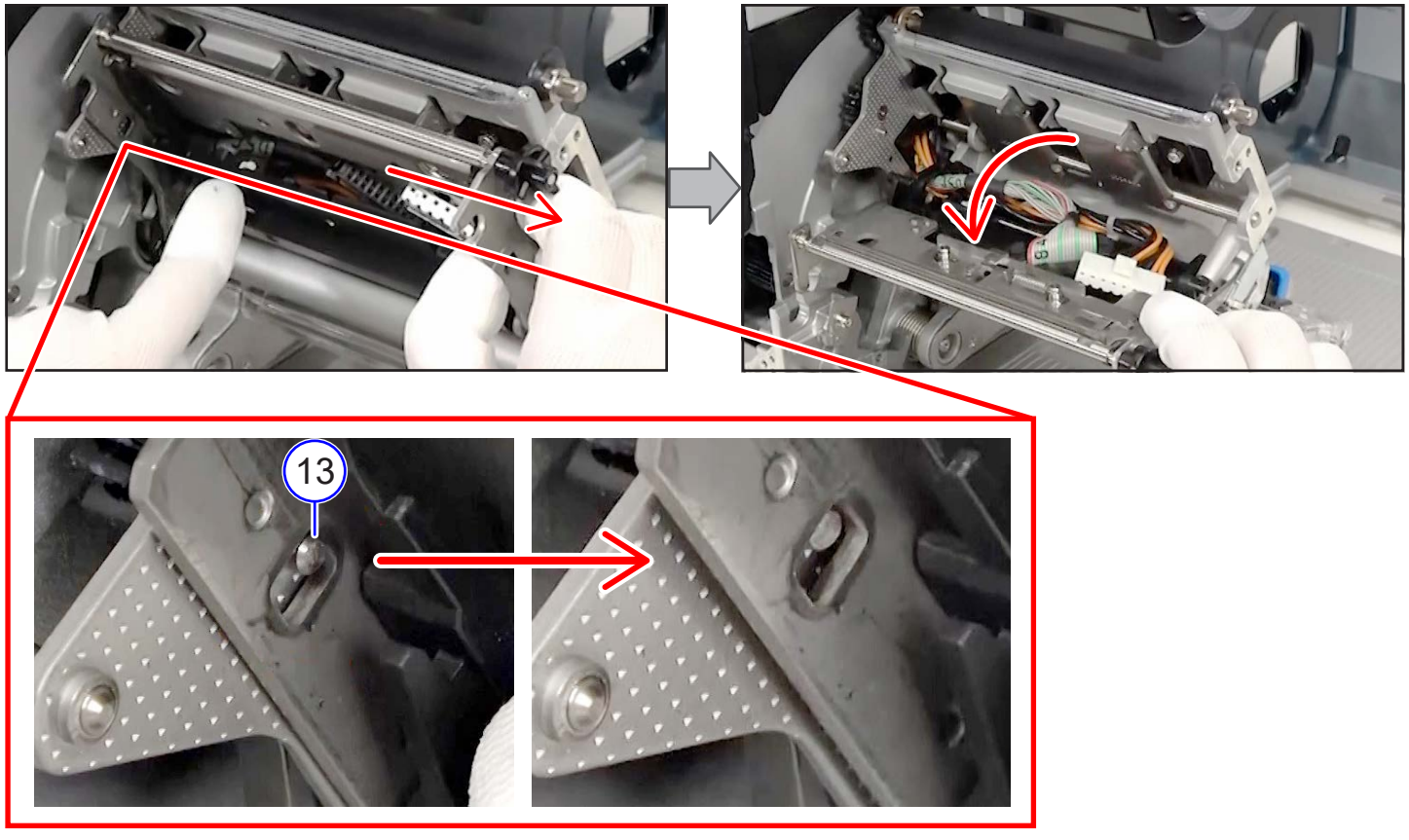

12 Close the HEAD FRAME.



13 Release hook and remove the RIBBON ROLLER ADJ COVER (⑭).

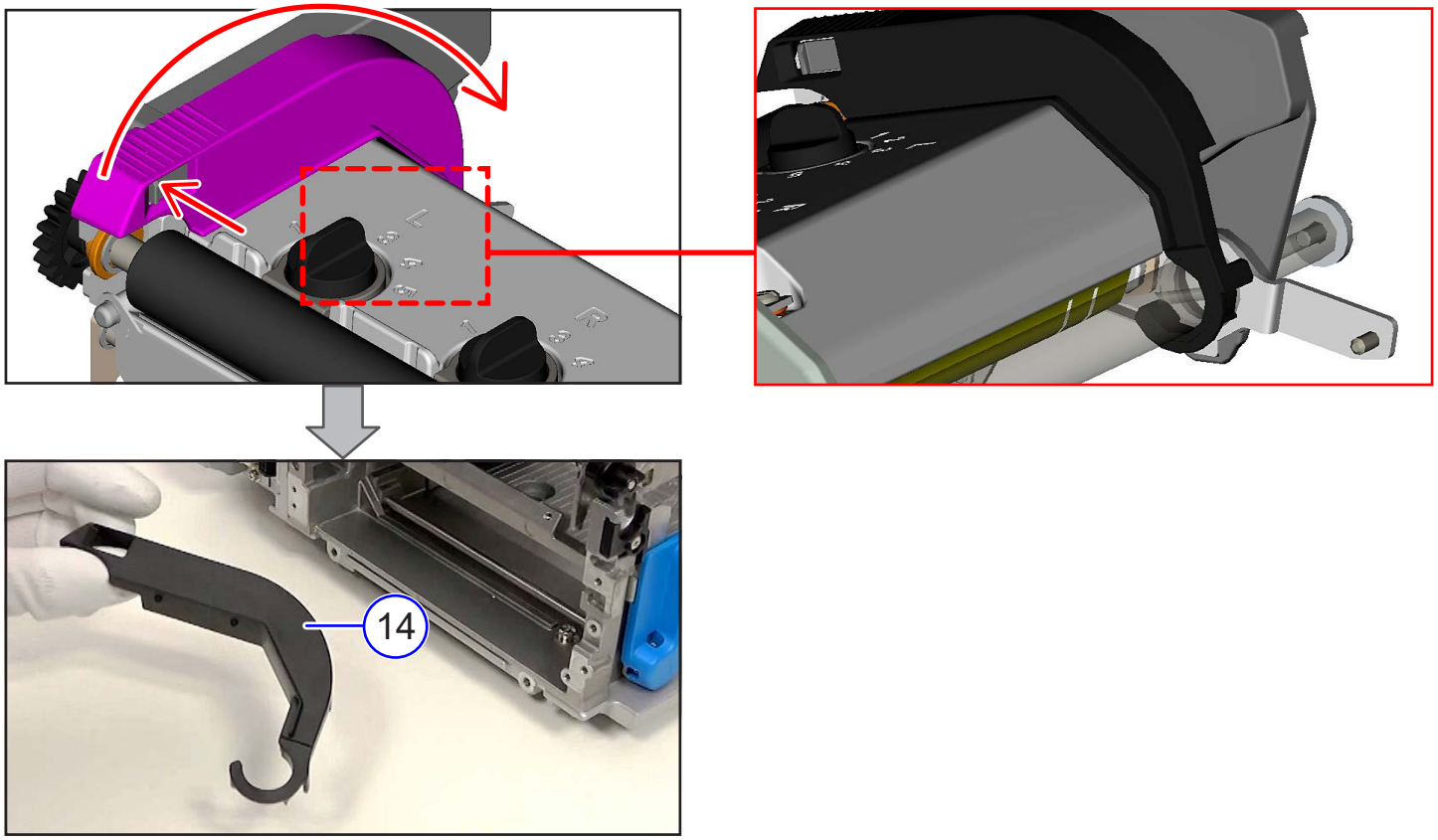

14 Wind the coaxial cable (⑮) of the HEAD COVER RFID around the HEAD SHAFT (⑯).

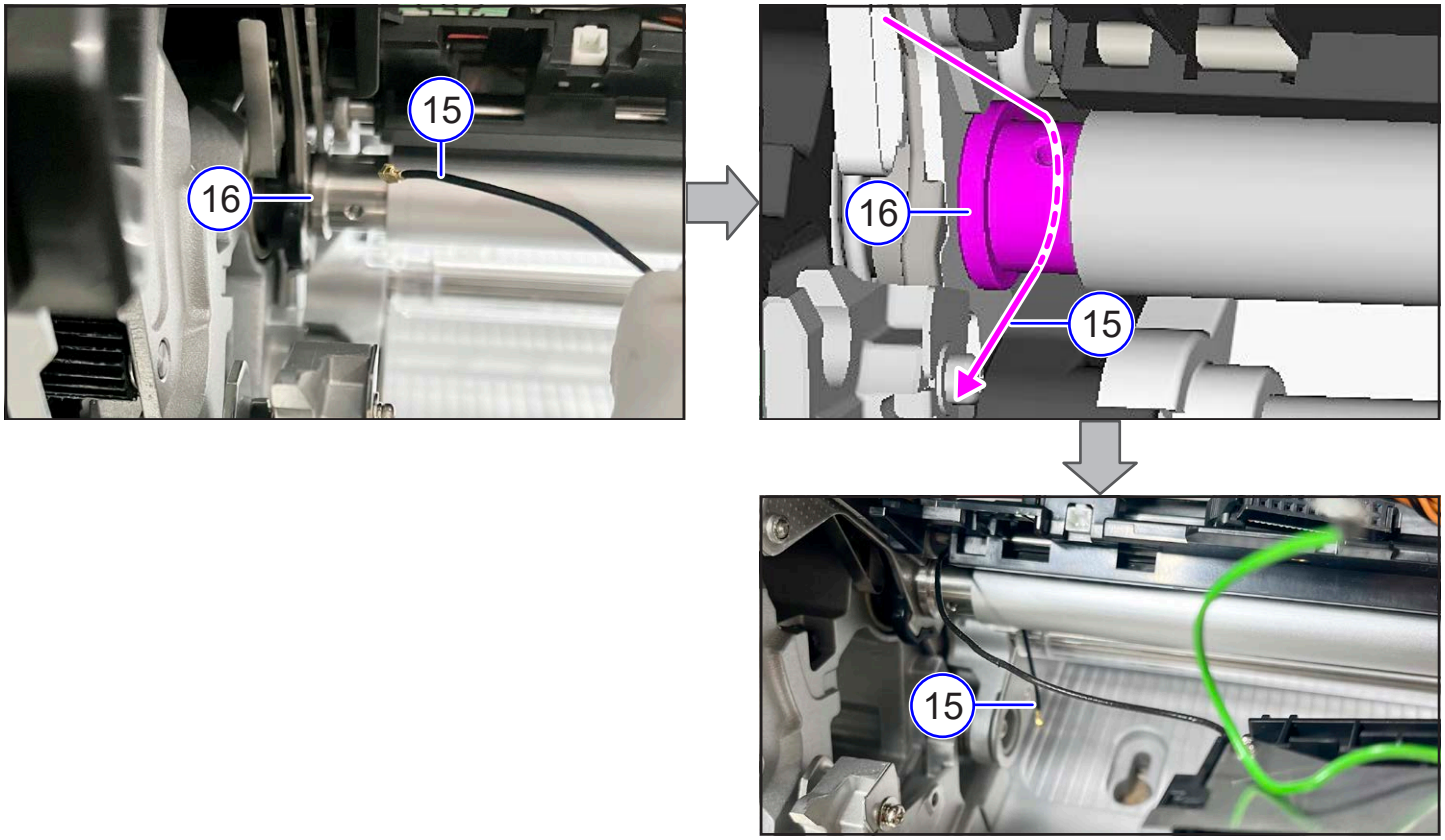

15 Pass the earth wire (⑰) of the HEAD COVER RFID through the cable hole (⑱).

CL4-SXR

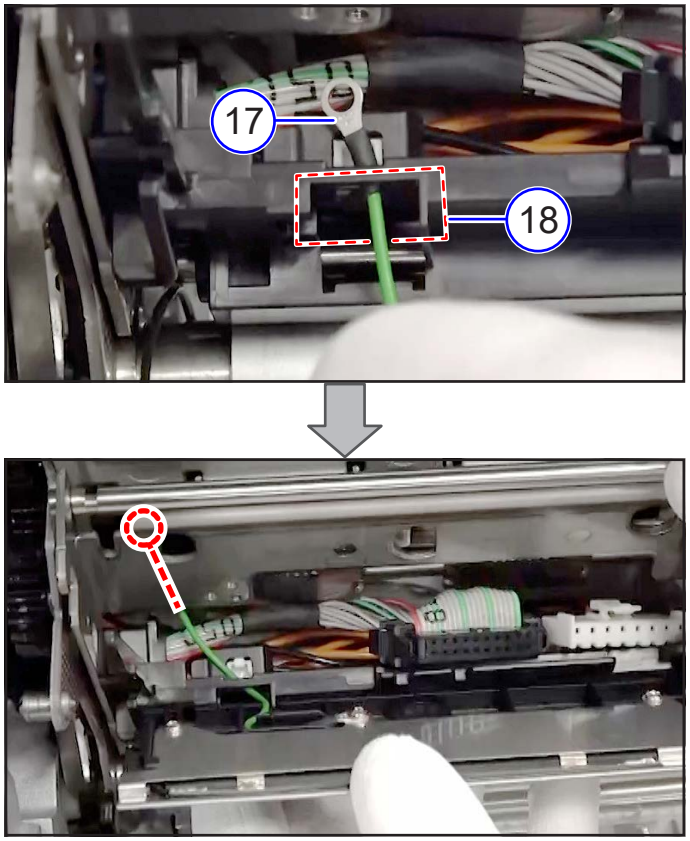

CL6-SXR

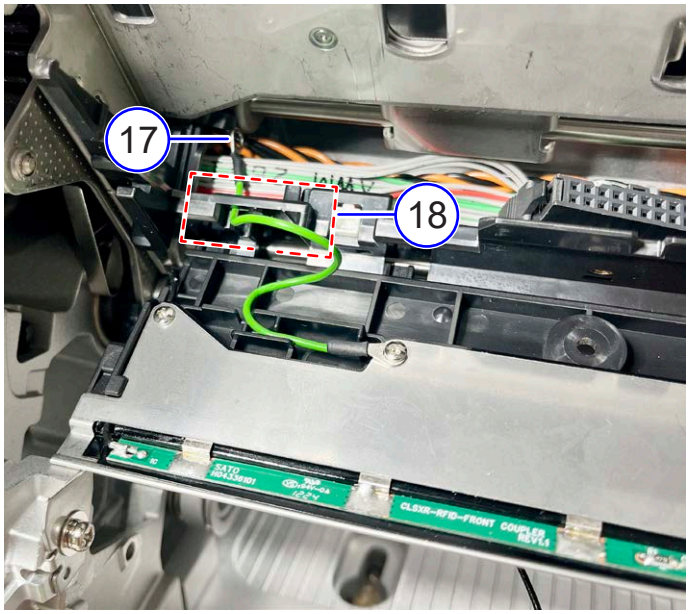

16 Attach the HEAD COVER (⑲) and fix it with screw (S2) .

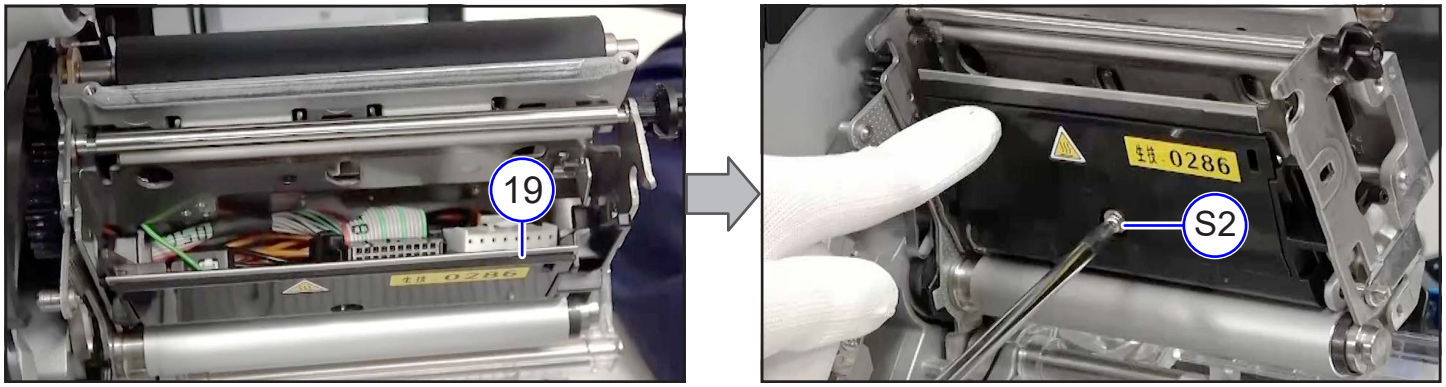

17 Open the HEAD BASE.

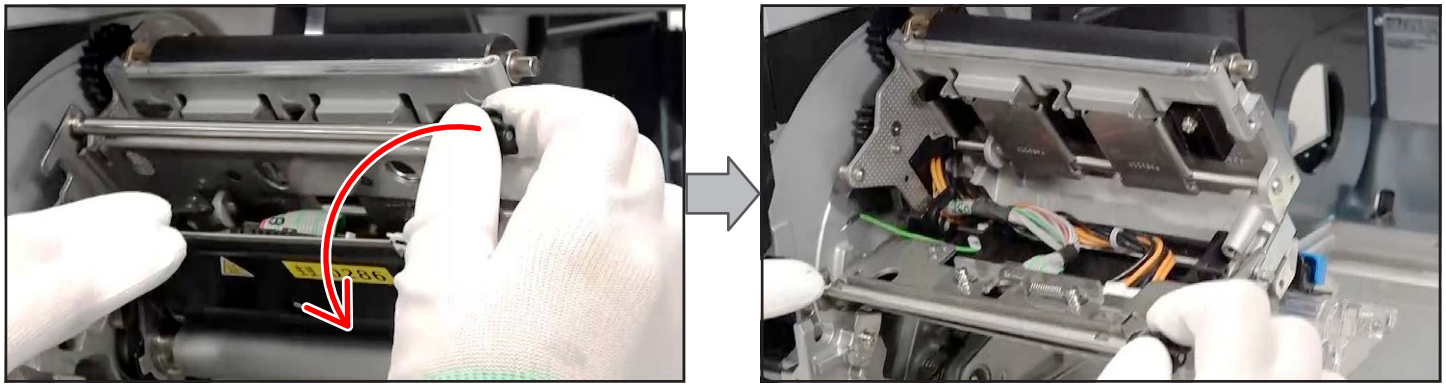

18 Fix the earth wire with one attached screw (⑳).

CL4-SXR

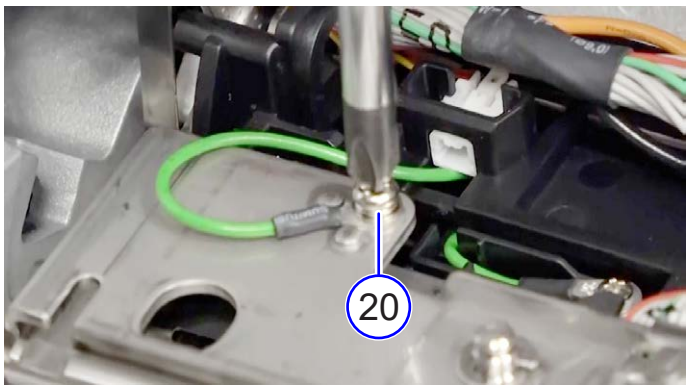

CL6-SXR

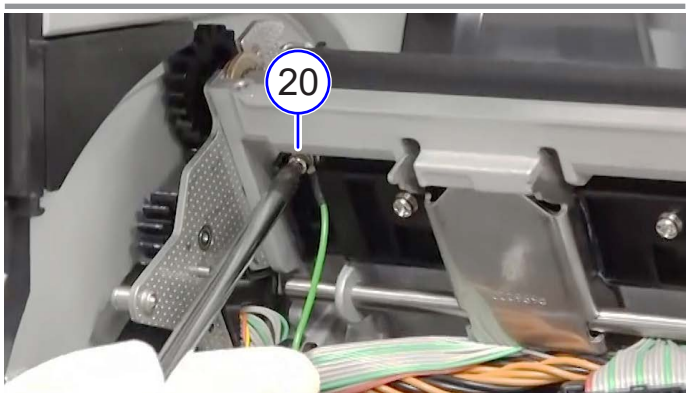

19 Close the HEAD BASE and insert it into the pin (㉑).



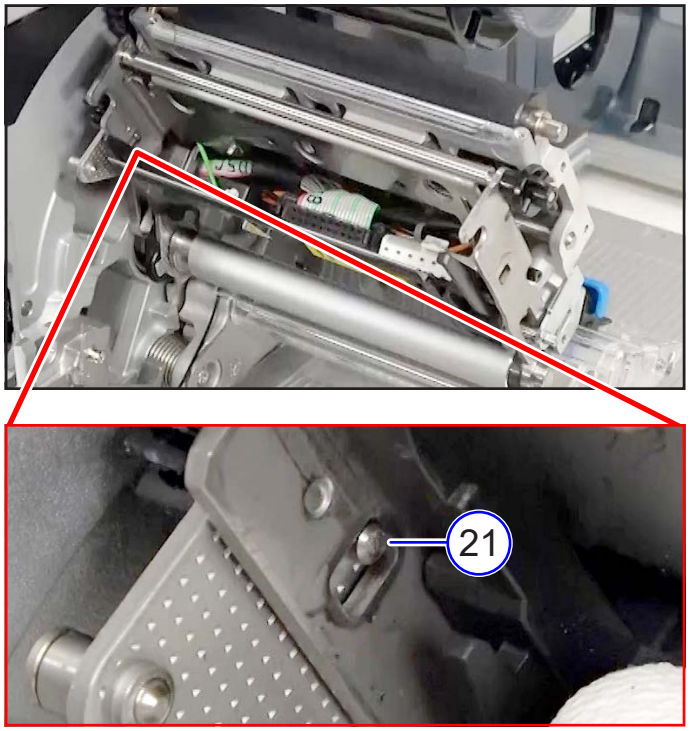

20 Check that the METAL BUSH (㉒) is securely inserted into the HEAD FRAME R (㉓).

21 Attach the HEAD FRAME R.

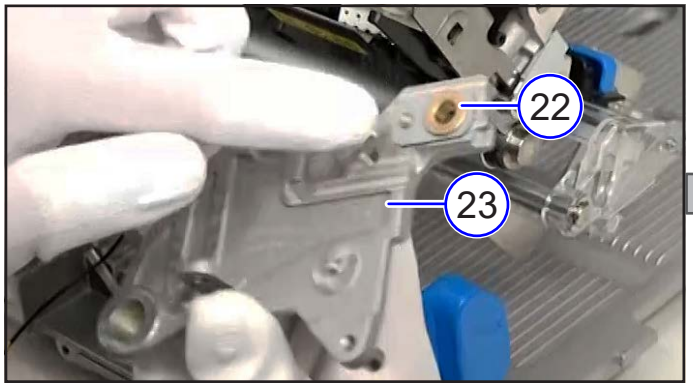



22 Fix the HEAD FRAME R with two screws (S1).

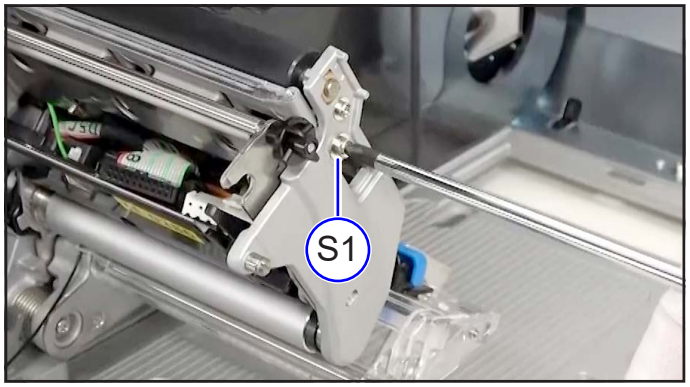

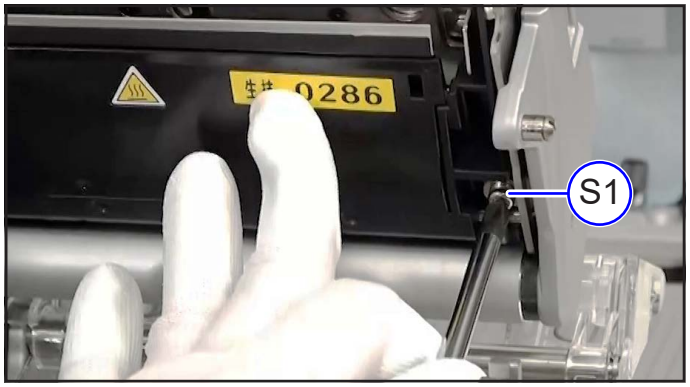

23 Fix the RIBBON ADJ PLATE (㉔) with two screws (S6).

Notes on assembling

- On both sides, align the center line of the position adjustment scale on the RIBBON ADJ PLATE with the mark on the frame side.

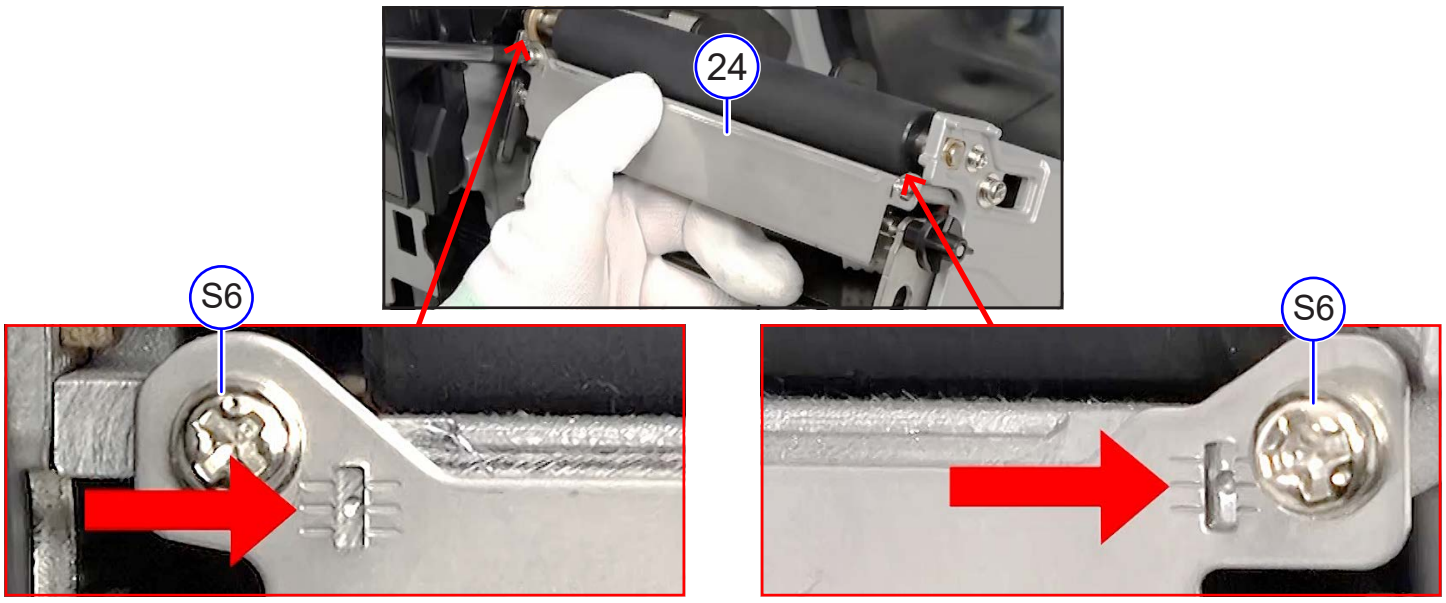

24 Attach the RIBBON ROLLER ADJ COVER and fix it with the hook (㉕).

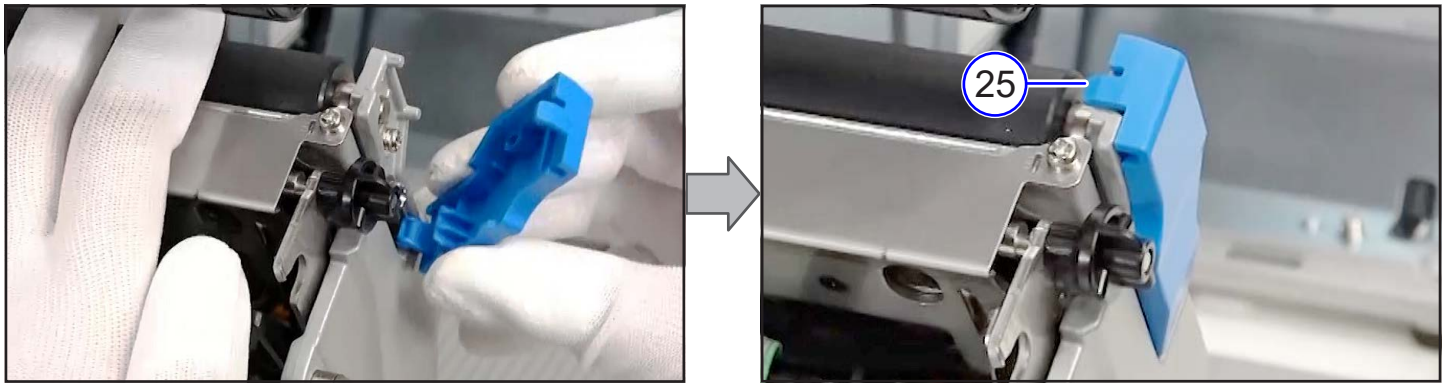

25 While taking care not to pinch the coaxial cable (㉖), attach the RIBBON ROLLER ADJ COVER (㉗).

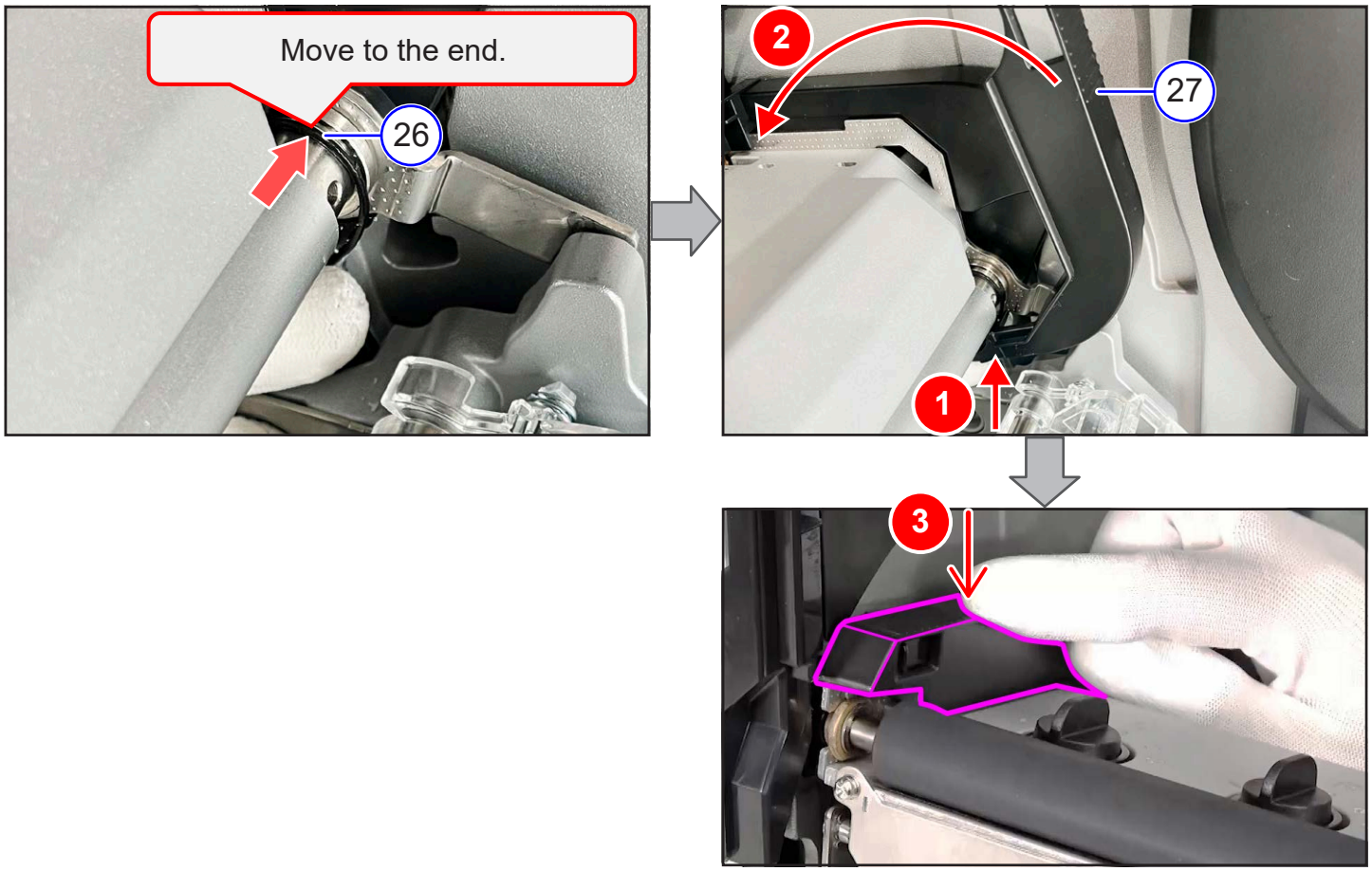

Notes on assembling

- Check the coaxial cable (㉖).

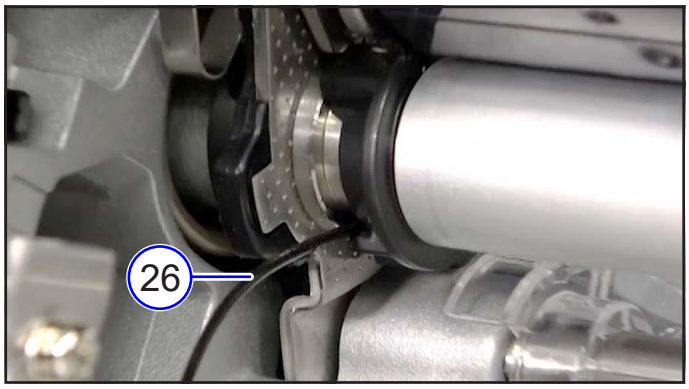

26 Attach the Print head (Thermal head).

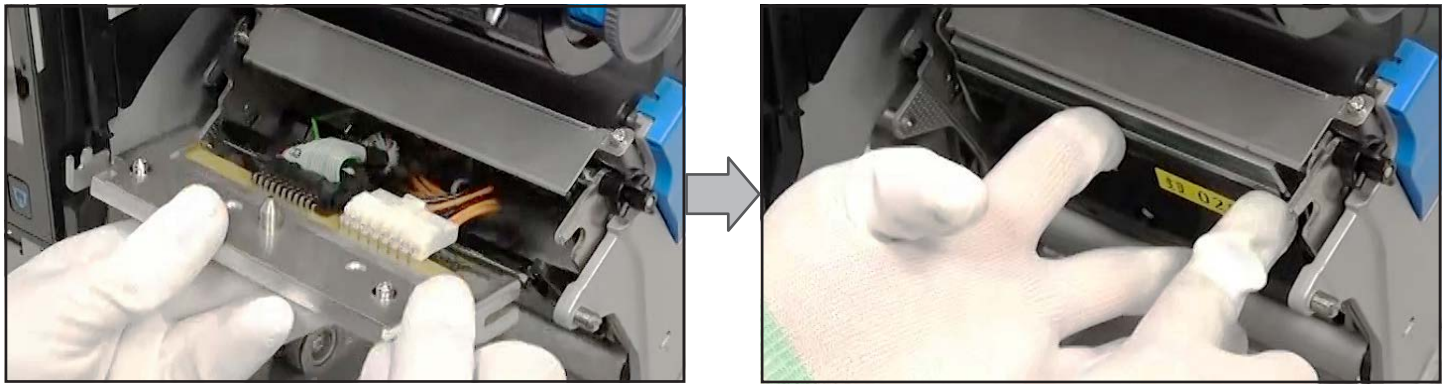

▶ Installing the RFID KIT.

27 Move the SENSOR CASE (㉘).

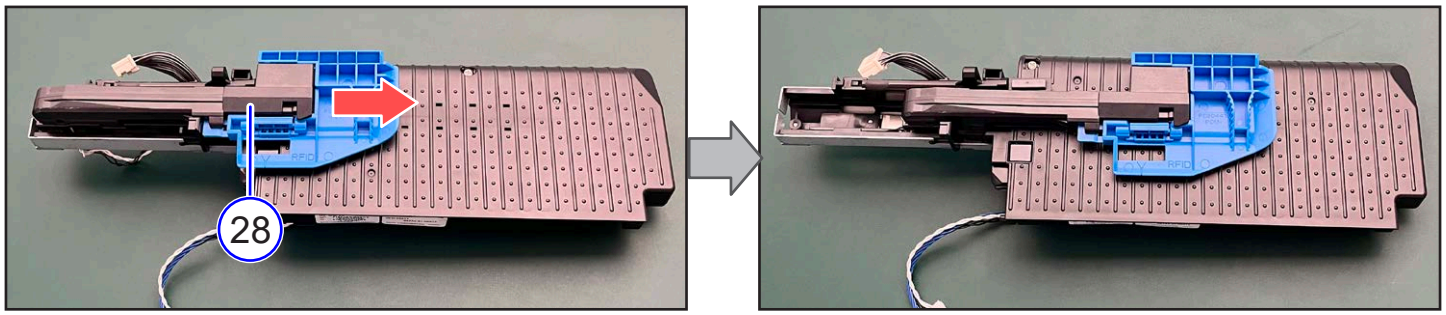

28 Place the RFID KIT cables inside the plate (㉙).

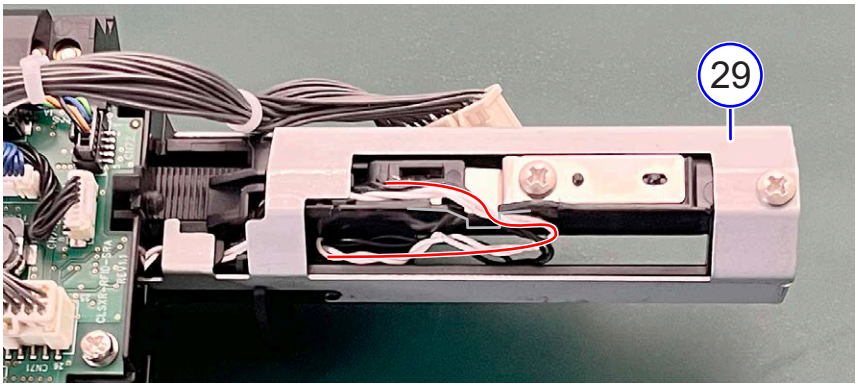

29 Attach the RFID KIT (㉚) .

Notes on assembling

- Pass the black cable (㉛) through the ENGINE FRAME.

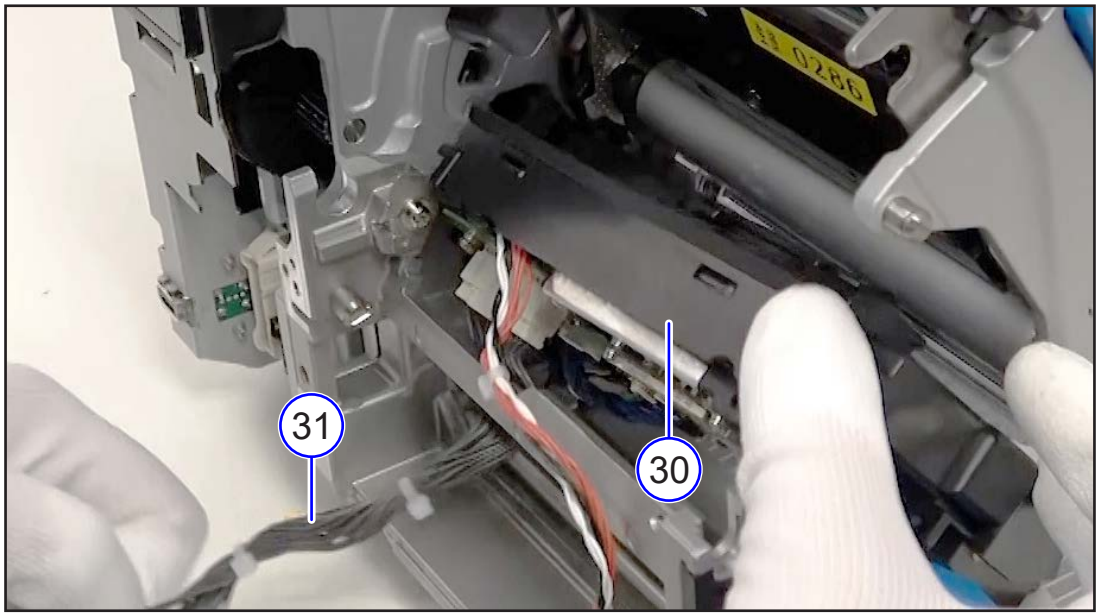

30 Pass the coaxial cable (㉜) through the cable hole (㉝) in the RFID KIT.

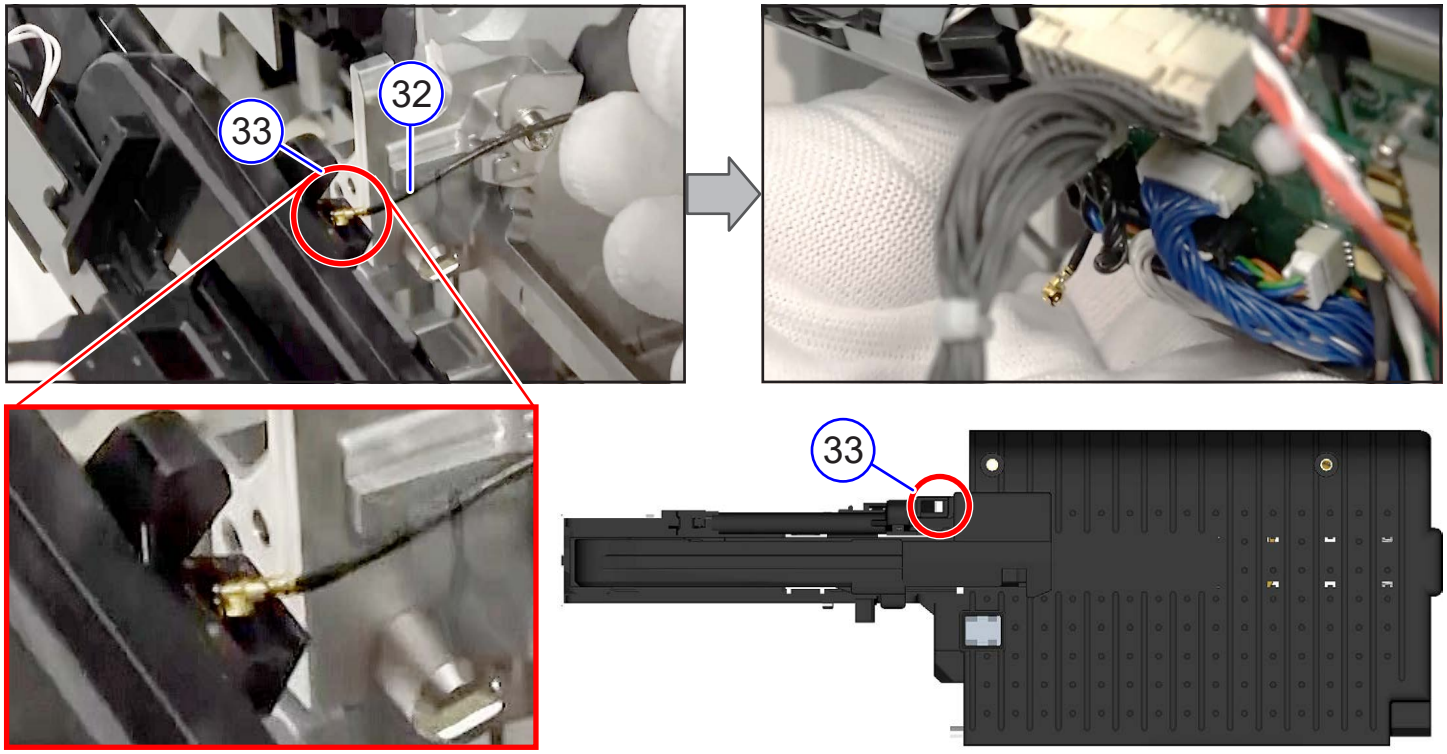

31 Pass the coaxial cable (㉞) through the hook (㉟) of the RFID KIT and connect it in place.

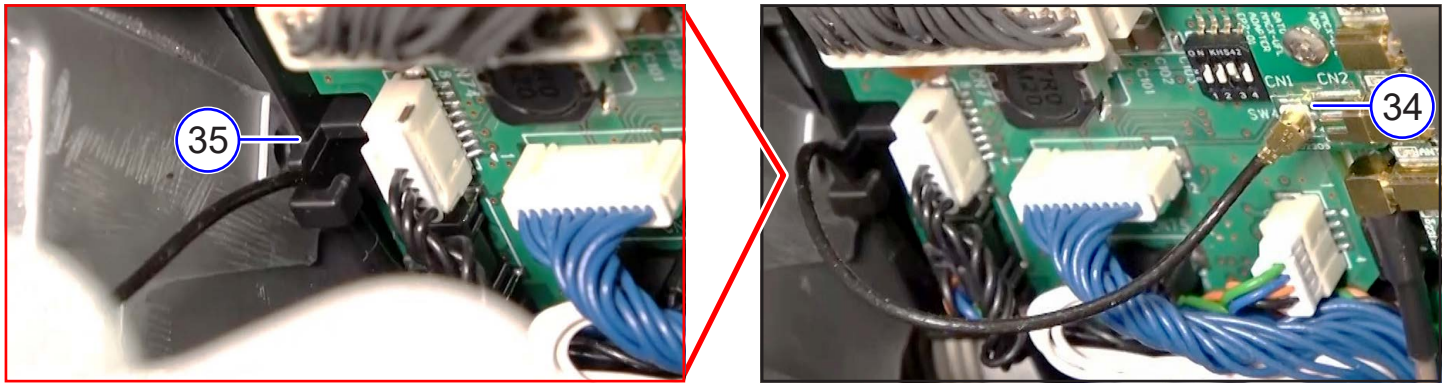

32 Fix the RFID KIT with attached screws (㊱).

CL4-SXR

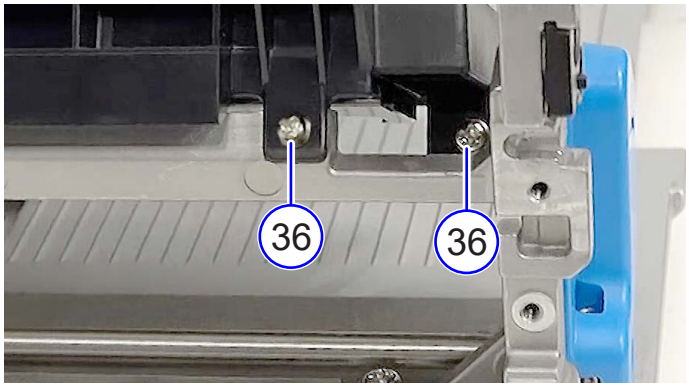

CL6-SXR

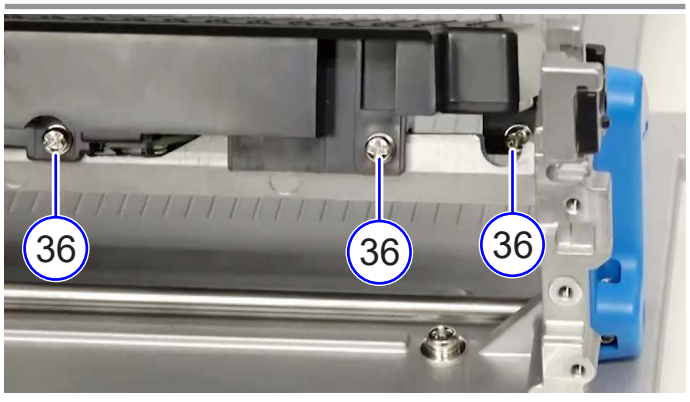

33 Pass the two cables (a, b) through the cable hole (㊲) and connect the connectors.

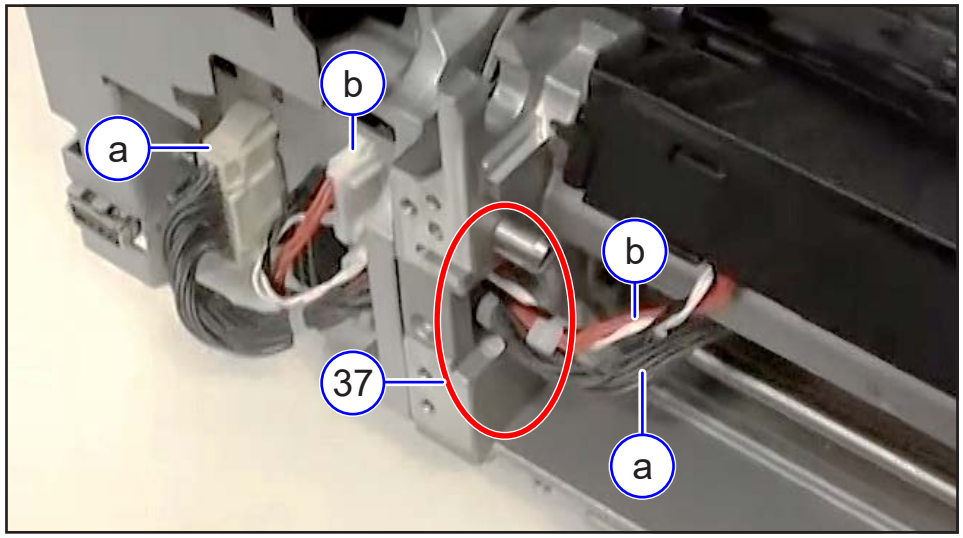

34 Attach the LABEL GUIDE (㊳) and lock it with the LABEL GUIDE LEVER (㊴).

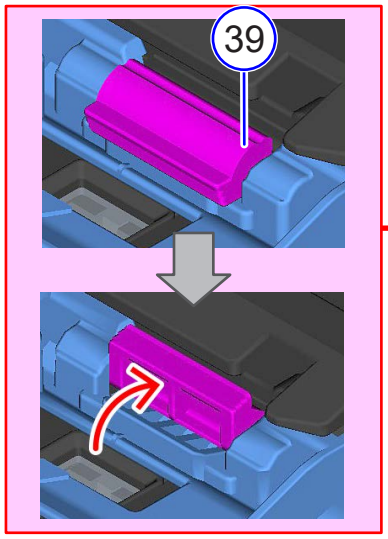

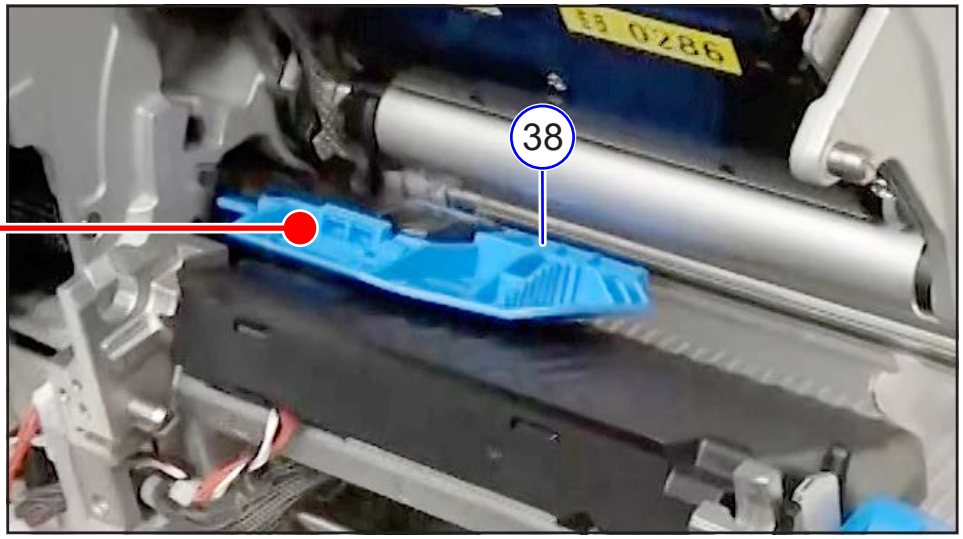

▶ From here, assembling procedure

35 Assemble the parts in the reverse order from step 2.

6 Troubleshooting

Back to top

6. 1 Error Message

6.1.1 Error Code List

6.1.2 Error causes and countermeasures

6. 2 Symptom-based troubleshooting

6.2.1 Printing

6.2.2 Media feeding

6.2.3 Power Supply

6.2.4 Communications

6. 1 Error Message

6.1.1 Error Code List

Error Message 1001 Machine Error

Error Message 1003 Parity Error

Error Message 1004 Overrun Error

Error Message 1005 Framing Error

Error Message 1006 Buffer Overflow

Error Message 1007 Cover Open / Head Open

Error Message 1008 Out of Paper

Error Message 1009 Ribbon End

Error Message 1010 Media Error

Error Message 1012 Head Error

Error Message 1015 Cutter Error

Error Message 1017 SBPL Command Error

Error Message 1019 RFID System Error

Error Message 1020 Calendar Error

Error Message 1021 BCC Check Error

Error Message 1022 Print Head Overheated

Error Message 1023 NTP Error

Error Message 1024 Head Density Changed

Error Message 1028 Gap Not Found

Error Message 1035 I-mark Not Found

Error Message 1046 EAP Authentication Error (EAP Failure)

Error Message 1047 EAP Authentication Error (EAP Timeout)

Error Message 1050 Bluetooth Error

Error Message 1058 CRC Check Error

Error Message 1066 Paper Jam

Error Message 1068 Wi-Fi Error

Error Message 1073 RFID Undetected Warning

Error Message 1075 NFC Error

Error Message 1076 Invalid command in NFC

Error Message 1077 Barcode Reader Connection Error

Error Message 1078 Barcode Reading Error

Error Message 1079 Barcode Reading Error

Error Message 1080 Barcode Comparison Error

Error Message 1111 Label Waste Prevention Error

Error Message 1114 Tag Not Found

Error Message 1115 Write operation failed

Error Message 1116 Failed to read the tag data.

Error Message 1117 Write operation failed

Error Message 1118 Write/Read values are not consistent

Error Message 1119 Failed to lock the data

Error Message 1120 Wrong tag UID is read

Error Message 1121 Multiple tags are detected.

Error Message 1123 Write operation failed

Error Message 1124 Wrong Tag type

Error Message 1125 Internal Error

Error Message 1126 Not enough power

Error Message 1129 Unsupported tag error

Error Message 1131 Exceed address error

Error Message 1132 RTC module error

Error Message 1133 SRA motor unit Error

Error Message 1134 RFID Module Overheated

Error Message 1142 Host Receive Rrror

Error Message 1147 EXT Connecter Error

Error Message 1148 Cutter Connecter Error

Error Message 1151 Printhead Error

Error Message 1152 USB Overcurrent Error

Error Message 1153 RFID Print Settings Error

6.1.2 Error causes and countermeasures

Error No.	Error Name
1001	Machine Error

LED: Lights in red Buzzer: Long sound, one time

Message	Recycle power. Contact technical support if not resolved.
Causes	An error occurs in the printer.
Countermeasures	Restart the printer. If the problem persists, replace the CONT PCB.

Error No.	Error Name
1003	Parity Error
1004	Overrun Error
1005	Framing Error

LED: Lights in red Buzzer: Short sound, 3 times

Message	Wrong RS-232C settings. Adjust settings and check cable.
Causes	(1) RS-232C settings are incorrect. (2) The RS-232C cable is not connected correctly.
Countermeasures	(1) Adjust the interface settings correctly. (2) Connect the RS-232C cable correctly.

Error No.	Error Name
1006	Buffer Overflow

LED: Lights in red Buzzer: Short sound, 3 times

Message	Receiving buffer full. Check host program.
Causes	(1) The size of the received data from the host exceeds the size of the receive buffer. (2) The interface settings between the host and printer is incorrect.
Countermeasures	(1) Change the settings on the host so that data that exceeds the size of the receive buffer cannot be sent.

Error No.	Error Name
1007	Cover Open / Head Open

LED: Lights in red Buzzer: Short sound, 3 times

Message	Head is open. Close print head. Attention : Print head is high temperature.
Causes	(1) Thermal head assembly isn't closed. (2) Sensor is dirty for detecting head open/close. (3) Failure of sensor for detecting head open/close.
Countermeasures	(1) Close the thermal head assembly. (2) Sensor is cleaned. (3) Exchange of sensor substrates.

Error No.	Error Name
1008	Out of Paper

LED: Lights in red Buzzer: Short sound, 3 times

Message	Check and load paper properly.
Causes	(1) The media is not loaded. (2) The media is not loaded correctly. (3) The media sensor is not operating properly.
Countermeasures	(1) Load the media correctly. (2) Adjust the sensor level. If the problem persists, replace the sensor and/or CONT PCB.

Error No.	Error Name
1009	Ribbon End

LED: Lights in red Buzzer: Short sound, 3 times

Message	Check and load ribbon properly.
Causes	(1) The ribbon runs out. (2) The ribbon was cut halfway.
Countermeasures	(1) Replace the ribbon with a new one. (2) Clean and adjust the ribbon path.

Error No.	Error Name
1010	Media Error

LED: Lights in red Buzzer: Short sound, 3 times

Message	Print is too long or wrong settings. Adjust print data or sensor settings.
Causes	(1) The print image is longer than actual size of the label. (2) Paper is fed longer than usual due to sensor level error.
Countermeasures	(1) Confirm label size. (2) Specify another print data. (3) Adjust sensor level.

Error No.	Error Name
1012	Head Error

LED: Lights in red Buzzer: Long sound, one time

Message	Replace print head or change head check settings.
Causes	(1) Print head problem. (2) Print head element worn out or damaged.
Countermeasures	(1) Change Print head check conditions to only check for missing elements in barcodes and try to adjust missing elements to white bars. If Ok printer will go back to Online mode. (2) Temporarily disable print head check until power is turned off. Hold down Right soft key for 5 seconds. Printer will return to Online mode. (3) Power off and Replace the print head.

Error No.	Error Name
1015	Cutter Error

LED: Lights in red Buzzer: Short sound, 3 times

Message	Please execute the cutter action. If not resolved, contact technical support.
Causes	(1) Paper jam at the cutter unit. (2) Cutter blade isn't back to the specified home position.
Countermeasures	(1) Clean the cutter unit. (2) Press Cut Action Key and move the cutter blade to home position

Error No.	Error Name
1017	SBPL Command Error

LED: Lights in red Buzzer: Short sound, 3 times

Message	There are multiple messages to be displayed and they vary depending on the error condition. However, errors with different messages do not occur simultaneously. Message list {0}: Invalid command {0}: Invalid parameter {0}: Command table read error {0}: Invalid graphic data/custom designed data {0}: Invalid registration area {0}: This number is already registered. {0}: Over registration area limit {0}: Data is not registered. {0}: The print position is outside the printable area. {0}: The barcode image is outside the printable area. {0}: Invalid PDF417 designation {0}: QR code generation error * {0} contains information about the location where the error occurred and the name of the error command.
Causes	Incorrect commands or parameters were found in print data. **CAUTION** Detected command information will be shown at the bottom of the screen.
Countermeasures	Check the print data. If the problem persists, perform the following: • Obtain the print data from doing a HEX dump. • Obtain the setting information using the Clone file.

Error No.	Error Name
1019	RFID System Error

LED: Lights in red Buzzer: Long sound, one time

Message	Recycle power. Contact technical support if not resolved.
Causes	(1) RDID module is not working properly (2) DSW setting of SRA board is incorrect
Countermeasures	(1) Replace the RFID module. (2) Turn of Printer and Set DSW settings of SRA board correctly

Error No.	Error Name
1020	Calendar Error

LED: Lights in red Buzzer: Long sound, one time

Message	Check calendar setting, or press CLEAR.
Causes	The date and time of the calendar are incorrect.
Countermeasures	Reset the calendar. If the problem persists, check the voltage of the coin battery and replace the battery if the voltage is less than 1.8 V. If the problem still persists, replace the RTC kit and/or CONT PCB.

Error No.	Error Name
1021	BCC Check Error

LED: Lights in red Buzzer: Short sound, 3 times

Message	BCC (Block Check Code) error. Press CANCEL or PRINT.
Causes	The sent data (one item's worth)'s BCC code is incorrect.
Countermeasures	Check the transmitted data and communication settings.

Error No.	Error Name
1022	Print Head Overheated

LED: Lights in red Buzzer: Long sound, one time

Message	Printer is overheated. Please wait to cool off.
Causes	The print head temperature is outside the permissible range.
Countermeasures	Stop the operation of the printer for a while to let the temperature of the printer decrease. When the temperature lowers, check if the print layout, print darkness and print speed are appropriate. If the problem persists, replace the print head and/or CONT PCB.

Error No.	Error Name
1023	NTP Error

LED: Flashes in red Buzzer: Long sound, one time

Message	No contact with time server. Please confirm network settings or contact your network administrator.
Causes	This warning is triggered when NTP error notifications are enabled. After the system is powered on, it checks the synchronization status with the NTP server after 120 seconds. If synchronization is not established, an NTP error is triggered. Once the synchronization status has been checked, NTP error monitoring ends and NTP warning monitoring starts.
Countermeasures	If a calendar clock (RTC) is installed the calendar can be set manually and operation be resumed without NTP functionality. To check or set the clock go to Systems settings menu and set Date and Time.

Error No.	Error Name
1024	Head Density Changed

LED: Flashes in red Buzzer: Long sound, one time

Message	No print head installed or head resolution was changed.
Causes	(1) Thermal head isn't installed to the printer. (2) A new thermal head with different resolution has been installed.
Countermeasures	(1) Install thermal head to the printer. (2) Confirm to change to new default settings. (3) Install thermal head with density same as old head.

Error No.	Error Name
1028	Gap Not Found

LED: Lights in red Buzzer: Short sound, 3 times

Message	Adjust sensor settings to match label type or clean sensor.
Causes	(1) Gap sensor level is not correct. (2) The sensor type is not correctly Set. (3) Paper meandering.
Countermeasures	(1) Adjust the gap sensor level (2) Select the correct sensor type for the paper (3) Clean the paper path and avoid the problem.

Error No.	Error Name
1035	I-mark Not Found

LED: Lights in red Buzzer: Short sound, 3 times

Message	Adjust sensor settings to match label type or clean sensor.
Causes	(1) I-MARK sensor level is not correct. (2) The sensor type is not correctly set. (3) Paper meandering.
Countermeasures	(1) Adjust the I-MARK sensor level (2) Select the correct sensor type for the paper (3) Clean the paper path and avoid the problem.

Error No.	Error Name
1046	EAP Authentication Error (EAP Failure)

LED: Lights in red Buzzer: Short sound, 3 times

Message	Erroneous Wi-Fi settings. Adjust settings.
Causes	EAP authentication failed.
Countermeasures	Perform the Wi-Fi settings correctly.

Error No.	Error Name
1047	EAP Authentication Error (EAP Timeout)

LED: Lights in red Buzzer: Short sound, 3 times

Message	Authentication timed out. Check AP and server configurations.
Causes	EAP authentication failed.
Countermeasures	Download a PAC file for EAP-FAST or correctly perform the EPA settings for the Access Point (AP) and authentication server.

Error No.	Error Name
1050	Bluetooth Error

LED: Lights in red Buzzer: Long sound, one time

Message	Disable Bluetooth or repair Bluetooth module.
Causes	Failed to connect to the Bluetooth module.
Countermeasures	Replace the Bluetooth module.

Error No.	Error Name
1058	CRC Check Error

LED: Lights in red Buzzer: Short sound, 3 times

Message	Signature does not match. Verify the transmitted data.
Causes	(1) CRC is not added. (2) CRC does not match.
Countermeasures	(1) Check transmitted data and interface settings. (2) JOB Cancel key: Cancel the print data with CRC error and resume printing from next item.

Error No.	Error Name
1066	Paper Jam

LED: Lights in red Buzzer: Short sound, 3 times

Message	Open print cover and load label again.
Causes	(1) Label is wrapped around the platen roller. (2) Label is not set correctly. (3) Abnormality of dispence Sensor.
Countermeasures	Clean the media path and load the media correctly. If the problem persists, perform the followings: • Replace the platen roller. • Check and adjust thelabel top sensor level. • Replace the label top sensor and/or CONT PCB.

Error No.	Error Name
1068	Wi-Fi Error

LED: Lights in red Buzzer: Long sound, one time

Message	Contact technical support.
Causes	The WLAN module is damaged.
Countermeasures	Replace the WLAN module.

Error No.	Error Name
1073	RFID Undetected Warning

LED: Lights in red Buzzer: Short sound, 3 times

Message	RFID command does not exist. Disable warning or check command or label.
Causes	With Non-RFID warning enabled and tag loaded, the items received do not contain an RFID issue command.
Countermeasures	(1) Add an RFID issue command to the print job. (2) Disable Non-RFID warning. (3) Replace with non-RFID label.

Error No.	Error Name
1075	NFC Error

LED: Lights in red Buzzer: Long sound, one time

Message	Contact technical support.
Causes	The NFC module is defective.
Countermeasures	Restart the printer. If the problem persists, perform the followings: • Remove and reinsert the NFC module connector. • Replace the NFC module and/or CONT PCB.

Error No.	Error Name
1076	Invalid command in NFC

LED: Lights in red Buzzer: Short sound, 3 times

Message	Failed to install settings from NFC.
Causes	A command error occurs and the settings are not saved correctly.
Countermeasures	Check the commands.

Error No.	Error Name
1077	Barcode Reader Connection Error

LED: Lights in red Buzzer: Short sound, 3 times

Message	Connect barcode reader.
Causes	(1) Barcode reader connection is not confirmed. (2) Communication between the barcode reader and printer failed.
Countermeasures	Check the connection between the barcode reader and printer.

Error No.	Error Name
1078	Barcode Reading Error

LED: Lights in red Buzzer: Short sound, 3 times

Message	Adjust attachment position of reader or confirm reader settings.
Causes	(1) Barcode/2D code is not read correctly. (2) There is a difference in the barcode comparison results
Countermeasures	(1) Check the print layout. (2) Check the barcode reader settings.

Error No.	Error Name
1079	Barcode Reading Error

LED: Lights in red Buzzer: Short sound, 3 times

Message	The setting value of checking start position is larger than the printed area.
Causes	The checking start position is longer than the media length.
Countermeasures	(1) Check the print layout. (2) Check the check start position.

Error No.	Error Name
1080	Barcode Comparison Error

LED: Lights in red Buzzer: Short sound, 3 times

Message	Check printed barcodes.
Causes	(1) Barcode/2D code could not be read correctly. (2) There is a difference in the barcode comparison results
Countermeasures	(3) Check the print layout. (1) Check the barcode reader settings.

Error No.	Error Name
1111	Label Waste Prevention Error

LED: Lights in red Buzzer: Short sound, 3 times

Message	Load the media so the leading edge is aligned with the media discharge outlet.
Causes	When feeding the media, its leading edge is not detected.
Countermeasures	Check the media setting position.

Error No.	Error Name
1114	Tag Not Found

LED: Lights in red Buzzer: Short sound, 3 times

Message	Check inlay and Printer/Antenna settings.
Causes	No tag is found or reading the tag failed.
Countermeasures	Confirm the inlay operation and check the printer/antenna configuration.

Error No.	Error Name
1115	Write operation failed

LED: Lights in red Buzzer: Short sound, 3 times

Message	Check inlay and Printer/Antenna settings.
Causes	Writing to the tag failed.
Countermeasures	Confirm the inlay operation and check the printer/antenna configuration.

Error No.	Error Name
1116	Failed to read the tag data.

LED: Lights in red Buzzer: Short sound, 3 times

Message	Check inlay, printer/antenna settings, or check if the address size exceeds the maximum tag capacity.
Causes	Reading the tag failed.
Countermeasures	(1) Confirm the inlay operation and check the printer/antenna configuration. (2) Check if the address exceeding the size of the tag is specified.

Error No.	Error Name
1117	Write operation failed

LED: Lights in red Buzzer: Short sound, 3 times

Message	Please use unlocked tags
Causes	(1) Tried to write to a write-locked tag. (2) Tried to write to an unwritable address.
Countermeasures	Use an tag that is not locked.

Error No.	Error Name
1118	Write/Read values are not consistent

LED: Lights in red Buzzer: Short sound, 3 times

Message	Check inlay and Printer/Antenna settings.
Causes	(1) The written data and read data do not match. (2) A value greater than the original data was written to the subtraction register. (FeliCa only)
Countermeasures	(1) Confirm the inlay operation and check the printer/antenna configuration. (2) Write an appropriate value to the subtraction register. (FeliCa only)

Error No.	Error Name
1119	Failed to lock the data

LED: Lights in red Buzzer: Short sound, 3 times

Message	Please check tag
Causes	The lock process failed.
Countermeasures	Check the tag in which an error occurred.

Error No.	Error Name
1120	Wrong tag UID is read

LED: Lights in red Buzzer: Short sound, 3 times

Message	Please check if you are using the correct tag type.
Causes	Read the UID other than the specified tag.
Countermeasures	Check if an tag specified by the tag type setting is used.

Error No.	Error Name
1121	Multiple tags are detected.

LED: Lights in red Buzzer: Short sound, 3 times

Message	Check inlay and Printer/Antenna settings.
Causes	(1) Multiple tags are captured at a time. (2) The captured IDm of the card is inconsistent between processes. (Tried to write to a wrong card.) (FeliCa only)
Countermeasures	Confirm the inlay operation and check the printer/antenna configuration.

Error No.	Error Name
1123	Write operation failed

LED: Lights in red Buzzer: Short sound, 3 times

Message	Please use unlocked tags, or adjust Write/Read power.
Causes	(1) Tried to write to a write-locked tag. (2) Tried to write to an tag when the write power is low.
Countermeasures	(1) Use media that is not locked. (2) Adjust the write/read radio power level.

Error No.	Error Name
1124	Wrong Tag type

LED: Lights in red Buzzer: Short sound, 3 times

Message	Specify the correct tag type.
Causes	An incorrect tag type is specified.
Countermeasures	Check the tag type, and specify the correct one.

Error No.	Error Name
1125	Internal Error

LED: Lights in red Buzzer: Short sound, 3 times

Message	Check the power level, you may need to increase the power output.
Causes	Acquiring the ID failed.
Countermeasures	The radio wave condition needs to be improved.

Error No.	Error Name
1126	Not enough power

LED: Lights in red Buzzer: Short sound, 3 times

Message	Check tag and 'threshold' for RSSI filter, or adjust Write/Read power.
Causes	With the RSSI filter enabled, the RSSI value of the tag lowered than the set value in “Threshold Value.”
Countermeasures	(1) Check the media and also the “Threshold Value” set for the RSSI filter. (2) Adjust the write/read radio power level.

Error No.	Error Name
1129	Unsupported tag error

LED: Lights in red Buzzer: Short sound, 3 times

Message	Check the tag model.
Causes	Unsupported tag types or encoded tags that cannot be written are used.
Countermeasures	Check the manufacturer and model of the inlay.

Error No.	Error Name
1131	Exceed address error

LED: Lights in red Buzzer: Short sound, 3 times

Message	Please check the data size, or check if the address size exceeds the maximum tag capacity.
Causes	(1) An attempt was made to write beyond the memory address range. (2) No memory exists at the address of the memory block to be written.
Countermeasures	(1) Check if the address specified exceeds the tag capacity. (2) Check the data size.

Error No.	Error Name
1132	RTC module error

LED: Lights in red Buzzer: Long sound, one time

Message	Contact technical support.
Causes	(1) With the RTC module connected, failed to the module communication. (2) Without connecting the RTC module, the module communication succeeded.
Countermeasures	(1) Replace the RTC kit. (2) Replace the CONT PCB.

Error No.	Error Name
1133	SRA motor unit Error

LED: Lights in red Buzzer: Long sound, one time

Message	Recycle power. Contact technical support if not resolved.
Causes	The SAR motor unit does not operate properly.
Countermeasures	Replace the RFID kit.

Error No.	Error Name
1134	RFID Module Overheated

LED: Lights in red Buzzer: Long sound, one time

Message	RFID module is overheated. Please wait to cool off.
Causes	The temperature of the RFID module exceeds the allowable limit.
Countermeasures	Stop the printer operation and wait until the temperature lowers.

Error No.	Error Name
1142	Host Receive Rrror

LED: Lights in red Buzzer: Long sound, one time

Message	Check the host's receiving settings.
Causes	The contents of the send message queue are full.
Countermeasures	Turn off the power to empty the contents of the send message queue.

Error No.	Error Name
1147	EXT Connecter Error

LED: Lights in red Buzzer: Long sound, one time

Message	Please power off and check your external device or connection status.
Causes	(1) A short circuit occurs at the EXT connector connection. (2) There is an abnormality in the external device connected to the EXT connector.
Countermeasures	Turn off the power and check the connection of the external signal connector. If necessary, clean the connections or replace the external device.

Error No.	Error Name
1148	Cutter Connecter Error

LED: Lights in red Buzzer: Long sound, one time

Message	Please power off and check connection status.
Causes	A short circuit is detected in the power connector connection of the cutter kit.
Countermeasures	Turn off the power and check the power connector connection of the cutter kit. If necessary, clean the connections or replace the cutter kit.

Error No.	Error Name
1151	Printhead Error

LED: Lights in red Buzzer: Long sound, one time

Message	Failed to detect the printhead. Please check connection status.
Causes	No print head is inserted or the inserted print head is not recognized as a print head.
Countermeasures	Install a recognizable print head.

Error No.	Error Name
1152	USB Overcurrent Error

LED: Lights in red Buzzer: Long sound, one time

Message	Please power off printer and disconnect your USB.
Causes	Overcurrent is detected in the USB HUB.
Countermeasures	Turn off the power and disconnect the USB-HUB. If necessary, clean the connections or recheck the connection.

Error No.	Error Name
1153	RFID Print Settings Error

LED: Lights in red Buzzer: Short sound, 3 times

Message	RFID printing failed. Please confirm the settings because combination of settings is invalid.
Causes	(1) The following problem occurred in the RFID printing process. (2) The print settings are an invalid combination to execute RFID processing.
Countermeasures	(1) Change the print settings and RFID settings to the most appropriate values. (2) Cancel the job.

6. 2 Symptom-based troubleshooting

6.2.1 Printing

Print quality

Keyword

• Printing is too light. • Printing is too dark. • Print darkness differs on the right side and left side.
• White lines appear in printing.

Checklist for SATO reseller or technical support center
① Is the cover properly closed? Check by opening and closing the cover. ② Clean the print head using cleaning supplies. ③ Change the print darkness setting. **CAUTION** After changing the print darkness setting, make sure that the barcode is read correctly.

Checklist for technician
① Check if the cover is properly closed. ② Check the condition of the print head and platen roller. Replace them if they are worn out or defective, or have scratches due to a foreign object. ③ Clean the print head and feed roller. ④ Check and change the print darkness setting. Check the printing and make necessary judgement whether the darkness is appropriate for the media. Change the darkness setting accordingly to improve the print image. **CAUTION** Print the actual print data and ensure that the new darkness setting is being applied. ⑤ Remove and reinsert the connector of the print head on the HEAD PCB.

Print position

Keyword

• Print position shifts vertically. • Print position shifts horizontally.

Checklist for SATO reseller or technical support center
① Is the media loaded properly? • Vertical shift: The media guides are positioned too tight against the media width, causing heavier load during media feeding. • Horizontal shift: The media guides are positioned too loose away from the media width, causing the media to meander horizontally. ② Are the printer settings set correctly? • Select the corect sensor type. • Set the print position. ③ Clean the platen roller and sensors using cleaning solution. ④ Perform the auto-calibration of sensors. * Perform the auto-calibration only when the vertical shifting in the test print is not consistent.

Checklist for technician
① Check if the media is properly loaded. (Ensure the media guides is positioned properly against the media width.) ② Check if any unnecessary load is being applied during feeding of the media. (The media shifting vertically/horizontally can be caused by the unnecessary load.) ③ Check the condition of the print head and platen roller. Replace them if they are worn out or defective, or have scratches due to a foreign object. ④ Clean the print head and feed rollers. ⑤ Check the settings in the printer. (The correct selection of sensor type and set the Imaging setting to the correct print position) ⑥ Check and adjust the sensor level. ⑦ Check if the label guide rack is holding the label in the center.

No printing

Keyword

• Nothing or blank print is created.

Checklist for SATO reseller or technical support center
① Is the media properly loaded? ② Printed within the media size? ③ Clean the platen roller and sensors using cleaning supplies. ④ Perform the auto-calibration of sensors. * Perform the auto-calibration only when the vertical shifting in the test print is not consistent.

Checklist for technician
① Check if the media is properly loaded. (Ensure the media guides is positioned properly against the media width.) ② Check if any unnecessary load is being applied during feeding of the media. (The media shifting vertically/horizontally can be caused by the unnecessary load.) ③ Check the print data. (Print-image may exceed the printable area, etc.) ④ Check and adjust the sensor level. ⑤ Remove and reinsert the connector on the print head and HEAD PCB.

Abnormal printing

Keyword

• Printing is garbled. • Printing is incorrect. • Print data itself has a problem.

Checklist for SATO reseller or technical support center
① What is the software application used? ② Is the print data correct? ③ Power off and on the printer, and recheck the result. ④ Is the same problem persisted if using other print data?

Checklist for technician
① Check the print data. **CAUTION** Ensure to obtain print samples to check for any problems. ② Check the work environment. (Suspected possible electrical noise generated by surrounding sources, etc.) ③ Remove and reinsert each cable. (Suspected for possible poor connectivity) ④ Reset printer after back-up the current settings and then recheck the print results. ⑤ Replace the CONT PCB if suspected faulty.

6.2.2 Media feeding

Cut position shifted

Keyword

• Cut position is shifted.

Checklist for SATO reseller or technical support center
① Is the media properly loaded? ② Adjust the offset position. ③ Perform the auto-calibration of sensors. * Perform the auto-calibration only when the vertical shifting in the test print is not consistent.

Checklist for technician
① Check if the media is properly loaded. (Ensure the media guides is positioned properly against the media width.) ② Clean and check the platen roller. Replace it if it is worn out or defective, or has scratches due to a foreign object. ③ Check the sensor level. ④ Adjust the offset position.

Label is not cut.

Keyword

• Label is not cut. (Improper cutting)

Checklist for SATO reseller or technical support center
① Check the settings in the printer related to Cut mode.
② Is the media properly loaded?
③ Power off and on the printer and touch [FEED] to feed the label. Is the cutting problem resolved after feeding the label?
④ Remove the cutter kit and install it again.

Checklist for technician
① Check if the media is properly loaded. (Ensure the media guides is positioned properly against the media width.)
② Clean and check the cutter. Replace them if they are worn out or defective, or have a scratch marking due to a foreign object.
③ Check the printer settings. (Ensure that the cutter setting is set to Cutter mode)
④ Perform the feed operation or test print to check for correct cutting operation.
➔ If the cutter is working, then check the print data and the priority setting between the printer and command.
➔ If the cutter is not working, refer to below items.
⑤ Clean the contacts between the printer and cutter.
⑥ Remove and reinsert the cutter cable connectors.
⑦ Replace the part accordingly, if suspected faulty. (CUTTER PCB → CONT PCB)

Dispense stop position shifted

Keyword

• Dispense stop position is shifted. • Label fails to stop at the dispense stop position.
• Label falls off from dispense plate. • Label cannot be peeled off from its back-liner.
• Label is caught on something.

Checklist for SATO reseller or technical support center
① Is the media properly loaded? ② Adjust the offset position. ③ Perform the auto-calibration of sensors. * Perform the auto-calibration only when the vertical shifting in the test print is not consistent.

Checklist for technician
① Check if the media is properly loaded. (Ensure the media guides is positioned properly against the media width.) ② Clean and check the platen roller. Replace it if it is worn out or defective, or has scratches due to a foreign object. ③ Check the sensor level. ④ Adjust the offset position.

Label not peeling off during dispense mode operation

Keyword

• Label is not peeling off.

Checklist for SATO reseller or technical support center
① Check the settings in the printer related to Dispense mode. ② Is the media properly loaded? ③ Power off and on the printer and touch [FEED] to feed the label. Does the dispenser kit work properly after feeding the label? ④ Remove the dispenser kit and install it again.

Checklist for technician
① Check if the media is properly loaded. (Ensure the media guides is positioned properly against the media width.) ② Clean and check the dispenser unit. When dispenser roller or dispenser plate is worn out, replace the dispenser kit. ③ Disconnect and reinsert the dispenser kit cable connector. ④ Replace the part if it is suspected faulty. (Dispenser sensor → CONT PCB)

Printed label not feed out during dispense mode operation

Keyword

• Label is not issued. • Printer is not working at all. • Nothing is printed.

Checklist for SATO reseller or technical support center
① Is the media properly loaded?
② Is there any label stayed in the dispenser sensor section?
③ Does the media back-liner sag? (The sensor is blocked by the back-liner.)
④ Clean the platen roller, print head and dispenser unit using cleaning supplies.

Checklist for technician
① Clean and check the platen roller, print head and dispenser unit. (The adhesive stucked on them acts as unnecessary load during feeding of media.) Replace them if they are worn out or defective, or have a scratch marking due to a foreign object.
② Check and adjust the dispenser sensor level. (The presence of the label is always recognized and thus the next label is not issued.)
③ Remove and reinsert the cable of the dispenser sensor or replace the sensor if it is suspected faulty.
④ Replace the CONT PCB if it is suspected faulty.

Printed labels keep continuously feed out during dispense mode operation

Keyword

• Malfunction of the printer dispense mode operation.

Checklist for SATO reseller or technical support center
① Is the print mode set correctly? (Ensure that the print mode is not set to “Continuous mode”.)
② Is the print mode set to “Dispenser mode”?
③ If the dispense sensing is disturbed by the surrounding/external lighting, change the direction/ location of the printer.

Checklist for technician
① Is the print mode set correctly? (Ensure that the print mode is not set to “Continuous mode”.)
② Clean and check the platen roller, print head and dispenser unit. (The adhesive stuck on them acts as unnecessary load during feeding of media.) Replace them if they are worn out or defective, or have a scratch marking due to a foreign object.
③ Check and adjust the dispenser sensor level. (The absence of the label is recognized and the next label is issued.)
④ Remove and reinsert the cable of the dispenser sensor or replace the sensor if it is suspected faulty.
⑤ Replace the CONT PCB if it is suspected faulty.

Label is stuck.

Keyword

• Label is stuck.

Checklist for SATO reseller or technical support center
① Remove the stucked label.
② Load the media properly.

Checklist for technician
① Check if the media is properly loaded. (Ensure the media guides is positioned properly against the media width.)
② Perform cleaning and checking. Replace parts if they are worn out or defective, or have a scratch marking due to a foreign object.

Label not feeding out.

Keyword

• Label is not being issued out (feed out).

Checklist for SATO reseller or technical support center
① Is the media loaded correctly? Or, is the label stuck?
② Is the label issued out (feed out) when you touch [FEED] in Offline mode?
③ Is the dispenser sensor being blocked by the media or back-liner?

Checklist for technician
Condition when the stepping motor not rotating: ① Manually rotate the stepping motor shaft to check for any abnormality (shaft rotation is not smooth). If any abnormality is found, replace the stepping motor (STEPPING MOTOR-LF). ② Replace the CONT PCB if it is suspected faulty. **Condition when the stepping motor shaft rotates normally:** ① Check the cover lock mechanism. ② Check the conveying load and torque of drive system such as gears and the platen roller. ③ Replace the CONT PCB if it is suspected faulty.

6.2.3 Power Supply

The printer power not turned on

Keyword

• The printer power is not turned on. • The printer does not operate.

Checklist for SATO reseller or technical support center
① Are the LED Indicator and LCD lit? ② Is the AC power cord plugged into the outlet? ③ Is the AC power cord inserted into the AC adapter? Isn't it loosely inserted? ④ Is the AC adapter cable inserted into the printer? Isn't it loosely inserted?

Checklist for technician
① Check the power supply voltage **Refer to** 2 Checking the Power Supply Voltage ② Check the output voltage of the AC adapter alone. ➔ Replace the AC adapter.

6.2.4 Communications

LAN communication not available (Nothing is printed even if the data is sent via LAN.)

Keyword

• Printing is not done. • No LAN communication.

Checklist for SATO reseller or technical support center
① Is the LAN cable properly connected?
② Change the port of the hub, and check again.
③ Check the LAN settings.
④ Power off and on the printer, and send a ping command from the PC to check for the reply status.

Checklist for technician
① Check the communication settings in the printer and the PC.
② Check for a ping reply.
③ Is the communication established when the printer and the PC are directly connected?
➔ If the communication can be established: Change the cable and/or hub, and check again.
➔ If the communication cannot be established: Replace the CONT PCB.

USB communication not established (Nothing is printed even if the data is sent via USB.)

Keyword

• Printing is not done. • No USB communication.

Checklist for SATO reseller or technical support center
① Remove and reinsert the USB cable, and restart the printer.
② Check the USB settings.

Checklist for technician
① Check the settings in the printer.
② Check if the printer is recognized by the device manager.
③ Reinstall the printer driver.
④ Replace the CONT PCB.

Bluetooth communication not established (Nothing is printed even if the data is sent via Bluetooth.)

Keyword

• Printing is not done. • No Bluetooth communication.

Checklist for SATO reseller or technical support center
① Is the Bluetooth parameter settings correct?
② Is the printer detected by the Bluetooth pairing?

Checklist for technician
① Check the communication settings in the printer and peripheral devices. (Establish the Bluetooth pairing again.)
② Replace the Bluetooth kit.
③ Replace the CONT PCB.

WLAN communication not established (Nothing is printed even if the data is sent via WLAN.)

Keyword

• Printing is not done. • No WLAN communication.

Checklist for SATO reseller or technical support center
① Is the WLAN parameter settings correct?
② Power off and on the printer, and send a ping command from the PC to check for the reply status.
③ Is the AP (Access Point) settings correct?

Checklist for technician
① Check the communication settings in the printer and peripheral devices, and check for a ping reply.
② Connect the printer and the PC in ad-hoc mode and check the communication again.
③ If the communication in ad-hoc mode fails, replace the WLAN kit.
④ If the problem persists, replace the CONT PCB.

NFC communication is not established.

Keyword

• NFC communication is not established.

Checklist for SATO reseller or technical support center
① Is the NFC function enabled?
② Hold the NFC mark of an NFC mounting device over the NFC antenna section in the up, down, left and right directions.

Checklist for technician
① Check the communication settings in the printer and peripheral devices.
② Remove and reinsert the connector.
③ Replace the NFC PCB.
④ Replace the CONT PCB.

Reference

This chapter describes the following:

1 Location of Sensors and Options

2 Checking the Power Supply Voltage

3 Guidelines for replacing parts (Confidential)

Back to top

1 Location of Sensors and Options

● CL4-SXR

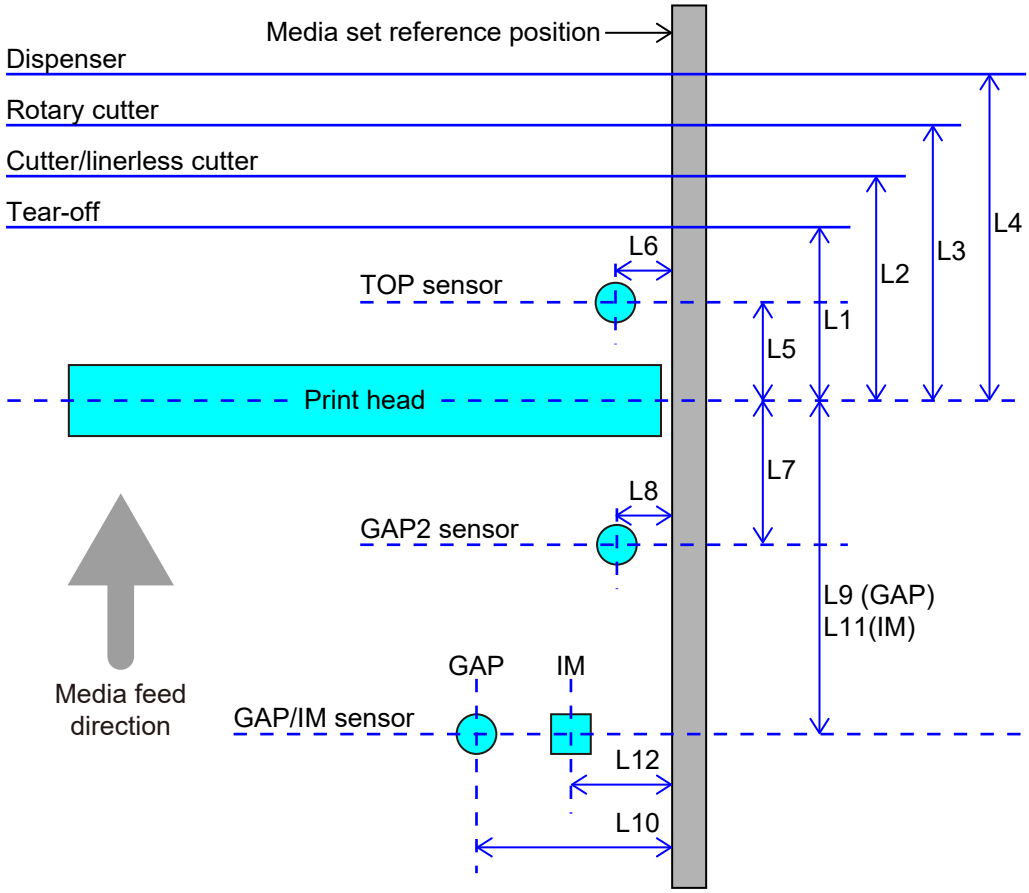

	Sensor/Option	Stop position [mm]
L1	Tear-off	19.1
L2	Cutter/linerless cutter	20.7
L3	Rotary cutter	20.5
L4	Dispenser	22.5
L5	TOP sensor	15.2 (Media feed direction)
L6		8.0 (Horizontal direction)
L7	GAP2 sensor	23.0 (Media feed direction)
L8		17.0 (Media feed direction)
L9	GAP/IM sensor	61.8 (GAP, Media feed direction)
L10		13.0 to 67.0 (GAP, Media feed direction)*1 3.0 to 67.0 (GAP, Media feed direction)*2
L11		61.8 (IM, Media feed direction)
L12		6.0 to 60.0 (IM, Media feed direction)*1 -4.0 to 60.0 (IM, Media feed direction)*2

*1 Media guide (sensor) with tab (notch not supported (standard))

*2 Media guide (sensor) without tab (notch supported)

● CL6-SXR

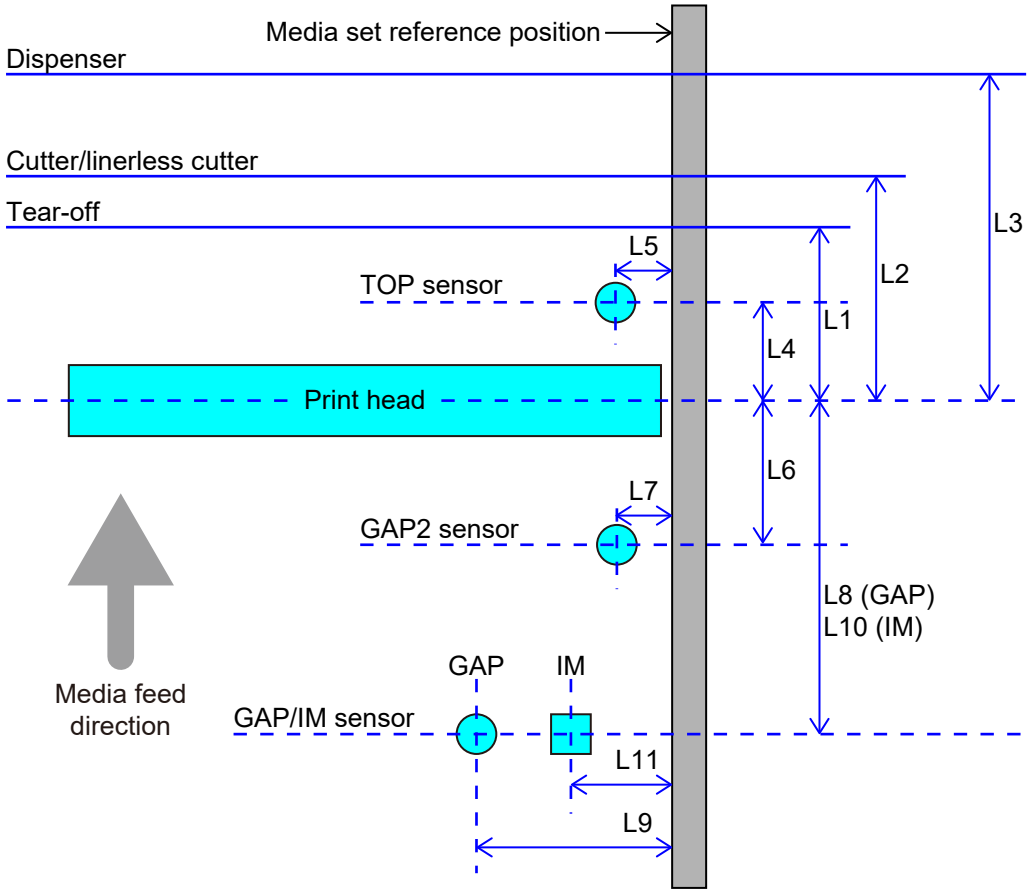

	Sensor/Option	Stop position [mm]
L1	Tear-off	19.1
L2	Cutter/linerless cutter	20.7
L3	Dispenser	22.5
L4	TOP sensor	15.2 (Media feed direction)
L5		8.0 (Media feed direction, Standard) 9.0 (Media feed direction, Cutter)
L6	GAP2 sensor	23.0 (Media feed direction)
L7		17.0 (Media feed direction)
L8	GAP/IM sensor	61.8 (GAP, Media feed direction)
L9		25.0 to 90.0 (GAP, Media feed direction)
L10		61.8 (IM, Media feed direction)
L11		8.0 to 73.0 (IM, Media feed direction)

2 Checking the Power Supply Voltage

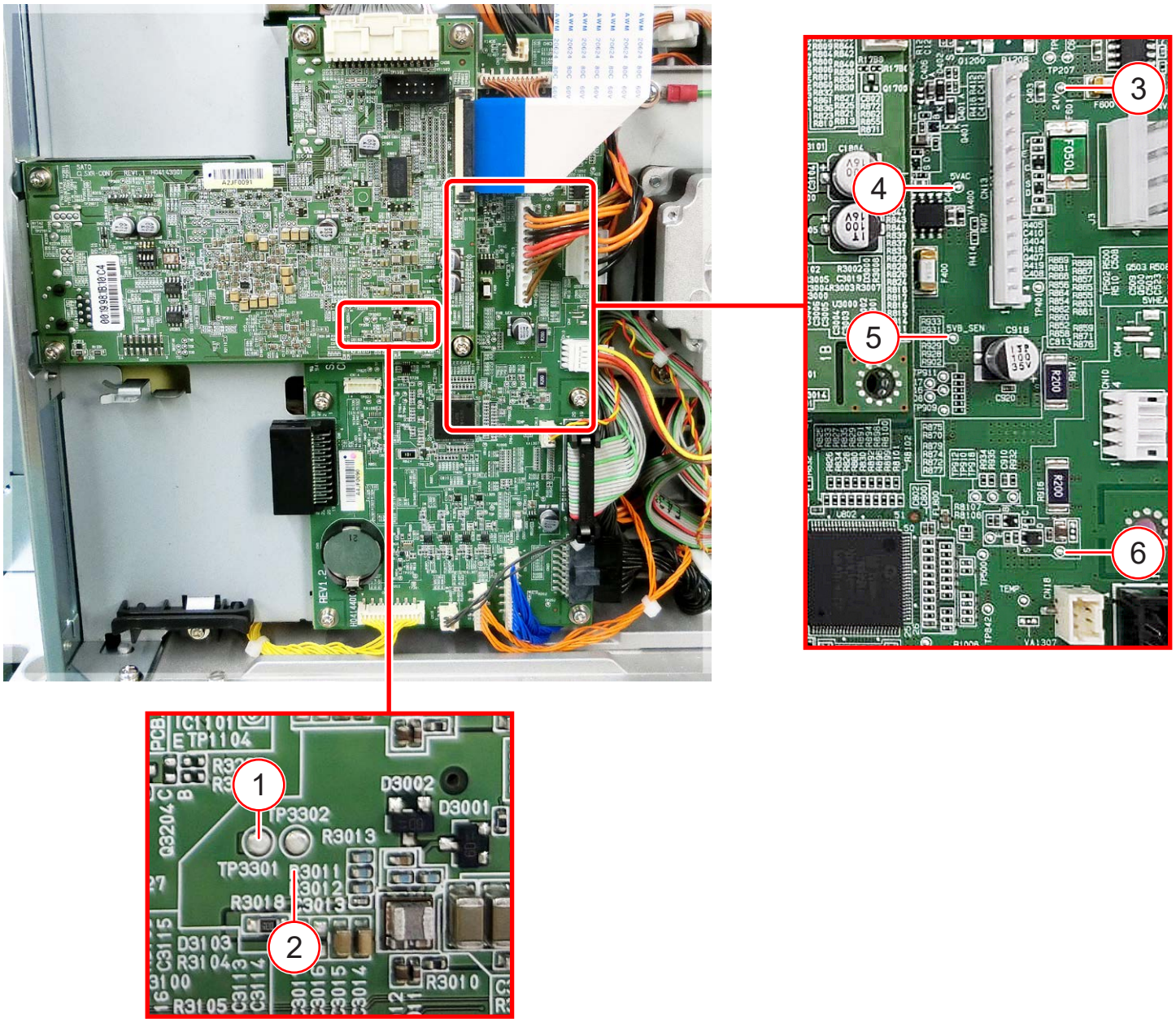

①	TP3301	5V	If the printer is turned on, it will always be output.
②	TP3302	GND	
③	24V	24V ± 1.2V	The output will be printed if the printer is turned on and not in sleep mode.
④	5VAC	5V ± 0.25V	Even if the printer is not turned on, it will continue to print as long as AC power is supplied.
⑤	5VB_SEN	5V ± 0.25V	No voltage output in sleep mode
⑥	5V_HEAD	5V ± 0.25V	No voltage output in sleep mode

3 Guidelines for replacing parts (Confidential)

Durability	
Print head (Thermal head)	50 km
Platen roller	50 km
Timing belt (Media feeding, liner rewinding)	50 km
Torque limiter (ribbon rewinding, ribbon supply, dispenser, liner rewinding)	150km
PCBs (CONT, ENGINE, KB, IF, SENSOR), Power unit	15,000 hours
Sensors Condition: Current and temperature must be within the specified range.	15,000 hours
Product life	300 km or 5 years
Precision of print position	
Print start position	±1.0 mm (up to φ 220) ±1.3 mm (φ220 to φ265)
Width direction position	±0.5 mm
Expansion and contraction accuracy in printing	
except for linerless	±1%
Linerless	+1% / –6%

Print mode		Motion 1 (Backfeed after printing) Motion 2 (Backfeed before printing) Motion 3 (cut during printing) No backfeed	
	Continuous	External signal operation	Pulse input enabled, pulse input disabled
	Tear-off	Operation mode	Sensor disabled
		External signal operation	Pulse input enabled, pulse input disabled
	Cutter	Operation mode	Sensor enabled (Motion 1, Motion 2, Motion 3, no backfeed) Sensor disabled (Motion 1, Motion 2, no backfeed)
		External signal operation	Pulse input enabled (except for Motion 3) Pulse input disabled
		Restrictions	* Restrictions on Motion 3 • Apply to the cutter and rotary cutter (standard) • Do not place print data such as QR codes or fonts within 18 to 23 mm from the cut position to prevent the occurrence of a void. • Minimum pitch 30 mm * When cutting the adhesive surface, use the linerless cutter included in the linerless kit. * When using media with perforations, cut the media after the perforations (upstream side). * Push-out action (function to push out the media by feeding it 10mm after cutting)
	Dispenser	Operation mode	Sensor enabled (Motion 1, Motion 2, no backfeed)
		External signal operation	Pulse input enabled, pulse input disabled
	Linerless	Operation mode	Sensor enabled (Motion 2) Sensor disabled (Motion 2)
		External signal operation	Pulse input enabled, pulse input disabled

Media		
Media thickness (upper part media + liner)		60 to 268 µm (0.060 to 0.268 mm)
Continuous	Length	203dpi: 6 to 2497 mm (9 to 2500 mm, including the liner) 305dpi: 6 to 1497 mm (9 to 1500 mm, including the liner) 609dpi: 6 to 397 mm (9 to 400 mm, including the liner)
	Width	22 to 128 mm (25 to 131 mm, including the liner)
Tear-off	Length	203dpi: 17 to 2497 mm (20 to 2500 mm, including the liner) 305dpi: 17 to 1497 mm (20 to 1500 mm, including the liner) 609dpi: 17 to 397 mm (20 to 400 mm, including the liner)
	Width	22 to 128 mm (25 to 131 mm, including the liner)
Cutter	Length	203dpi: 17 to 2497 mm (20 to 2500 mm, including the liner) 305dpi: 17 to 1497 mm (20 to 1500 mm, including the liner) 609dpi: 17 to 397 mm (20 to 400 mm, including the liner) * For the minimum media length for Motion 3 (cut during printing), refer to the conditions for cutting during printing in the operation specifications.
	Width	22 to 128 mm (25 to 131 mm, including the liner)
Dispenser Simple type/liner rewinding type	Length	203dpi: 10 to 397 mm (13 to 400 mm, including the liner) 305dpi: 10 to 397 mm (13 to 400 mm, including the liner) 609dpi: 10 to 397 mm (13 to 400 mm, including the liner) * 10 to 27 mm can only be used for thermal transfer. * Restrictions apply depending on media type, media size, temperature, humidity, print speed, etc.
	Width	22 to 128 mm (25 to 131 mm, including the liner)
	Maximum liner rewinding diameter	φ120 mm (4.7 inches)
Linerless	Length	30 to 120 mm
	Width	60 to 118 mm

	Rotary cutter (Standard)	Length	203dpi: 30 to 2497 mm (33 to 2500 mm, including the liner) 305dpi: 30 to 1497 mm (33 to 1500 mm, including the liner) 609dpi: 30 to 397 mm (33 to 400 mm, including the liner)
		Width	22 to 128 mm (25 to 131 mm, including the liner)
	Rotary cutter (Heat resistant)	Length	203dpi: 30 to 2497 mm (33 to 2500 mm, including the liner)
		Width	22 to 128 mm (25 to 131 mm, including the liner)
	Restrictions	* The minimum media size for pitch sensor disabled (sensor disabled) varies depending on the print speed. * For RFID • The length must be 15.8 mm or more. • For RFID tags and RFID labels, the thickest part is 268 µm or more, so be sure to evaluate them before use.	
	Media types/Media forms	Media roll (face-out/face-in), Fan-fold * For linerless, face-out only	
	Precautions * During the BF operation, some RFID labels are prone to jamming due to floating. * Check each label individually (especially when using in a low temperature environment or for labels of P27 mm or less). * Do not use removable glue for face-out type. <Cutter> * Since the rotary cutter (heat resistant) is made of a special material, it is necessary to check each time whether the media to be used is suitable. * When using media with perforations, cut the media after the perforations (upstream side). <Dispenser> * * For the dispenser, be sure to use the media for standard models. * * Basically, use the upper part media of 50 µm or more thickness (except for the following two types of media). However, even if 50 µm or more, it may not be able to be dispensed depending on the media type, so check the dispenser operation in advance. • 3G1G1G1 > 4 Chemist general-purpose 38 strong adhesion • 1DDA2BL > 4 Nema 38S strong adhesion * For peel end processing, use a device manufactured so that the die-cut liner made by waste matrix removal is positioned at the rear end of the labels.		

Roll and core diameter sizes

Media roll

Standard specifications, cutter specifications, simple dispenser specifications	Roll diameter	Maximum φ220 mm (φ8.6 inches)
	Core inner diameter	φ76 mm (φ3 inches) φ101 mm (φ4 inches)

* When using the standard media holder
* When using the optional Φ 265mm compatible media holder kit
  Maximum Φ 265mm (Φ 10 inch) with Φ 76mm (Φ 3 inch) core
  Maximum Φ 240mm (Φ 9.5 inch) with Φ 101mm (Φ 4 inch) core

Dispensed liner rewinding	Roll diameter	Maximum φ220 mm (φ8.6 inches)
	Core inner diameter	φ76 mm (φ3 inches)

* When using the standard media holder

Linerless	Roll diameter	Maximum φ200 mm (φ8 inches)
	Core inner diameter	φ76 mm (φ3 inches)

Fan-fold media

Precautions

* Use a 4-inch core for thick media (150 µm or more), non-adhesive media, or RFID tags/ labels.

<Dispenser>

* Do not use rolls or fanfolds with perforations (the liner may fold by the dispenser plate and get caught on it, causing feed slippage or media jams)

< Cutter >

* Depending on the media type, media size, and environment, static electricity may cause the media to stick to the cutter kit and not fall off, so check in advance which media is prone to generating static electricity.
* Since heat-resistant media is made of special substrates, specifications such as the roll outer diameter need to be checked each time.

<Fanfold>

* Fanfold media is supplied from outside the printer.
* The height of fanfold media may be limited depending on the location.
* When fanfold media is pulled in from under the desk, etc., make sure that it does not interfere with the printing operation. Also, check the type and size of the fanfold media in advance.

Ribbon	
Ribbon length	Maximum 600 m
Ribbon width	39.5, 45, 59, 76, 84, 92, 102, 111, 128 mm * For 39.5 mm width, maximum 450 m roll * When using high-precision printing mode, maximum 300 m roll
Wind direction	face-out /face-in
Winding method	Core less * For detailed specifications, refer to "Supply Processing Specifications". * Use ribbons wider than the media.
Ribbon set position	To one side
Ribbon types	Refer to "Print Matching list by Printer”.